intertek
Total Quality. Assured.

STOVE BUILDER INTERNATIONAL INC.
TEST REPORT

SCOPE OF WORK
EPA EMISSIONS TESTING/HE350 SERIES (HE350, FP-15 WATERLOO, FP-15A WATERLOO, HORIZON, MONACO XL, WFP100, ST. CLAIR 4300)/ WOOD FUEL ROOM HEATER

REPORT NUMBER
102163747MTL-001R1

TEST DATE(S)
06/08/16 - 06/10/16

ISSUE DATE **[REVISED DATE]**
07/08/16 08/31/21

PAGES
29

DOCUMENT CONTROL NUMBER
GFT-OP-10c (05/10/17)
© 2017 INTERTEK

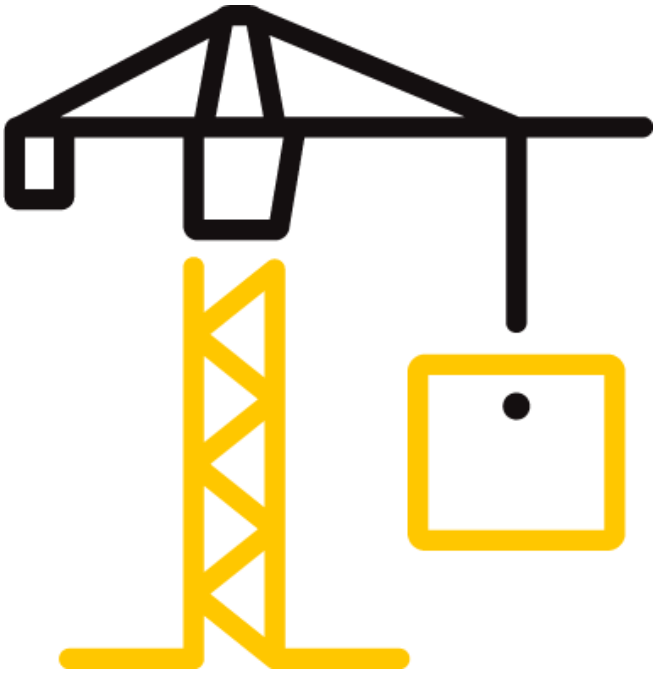

intertek
Total Quality. Assured.

8431 Murphy Drive
Middleton, WI 53562

Telephone: 608-836-4400
Facsimile: 608-831-9279
www.intertek.com/building

TEST REPORT FOR STOVE BUILDER INTERNATIONAL INC.
Report No.: 102163747MTL-001R1
Date: 08/31/21

REPORT ISSUED TO

STOVE BUILDER INTERNATIONAL, INC.
250 de Copenhague
ST-Augustin-de-Desmaures, Qc, G3A 2H3

SECTION 1

SCOPE

Intertek Testing Services NA (Intertek) has conducted testing for Stove Builder International Inc., on model FP-15 Waterloo (HE350 Series) wood burning room heater to evaluate all applicable performance requirements included in "Determination of particulate matter emissions from wood heaters." FP-15 Waterloo is a representative model of the HE350 Series. This series includes the following models: FP-15 Waterloo, FP-15A Waterloo, Horizon, Monaco XL, WFP100 and St. Clair 4300.

The test was conducted to determine if the unit is in accordance with U.S EPA requirements under EPA 40 CFR Part 60 "Standards of Performance for New Residential Wood Heaters, New Residential Hydronic Heaters and Forced-Air Furnaces". This evaluation was conducted on June 8th to June 10th, 2016. The following test methods were applicable:

ASTM E2515-11- Standard Test Method for Determination of Particulate Matter Emissions Collected by a Dilution Tunnel

ASTM WK47329-14 (draft version of the published ASTM E3053-17) - Standard Test Method for Determining Particulate Matter Emissions from Wood Heaters using Cordwood Test Fuel. It is based on EPA letter dated January 21st 2016.

CSA B415.1-10 - Performance Testing of Solid-Fuel-Burning Heating Appliances

Testing was performed by the undersigned at client's facility.

This report does not constitute certification of this product nor an opinion or endorsement by this laboratory.

SECTION 2

SUMMARY OF TEST RESULTS

The appliance tests resulted in the following performance:

Particulate Emissions: 1.6 g/hr
Carbon Monoxide Emissions: 2.7 g/min
Heating Efficiency: 64% (Higher Heating Value Basis)

8431 Murphy Drive
Middleton, WI 53562

Telephone: 608-836-4400
Facsimile: 608-831-9279
www.intertek.com/building

TEST REPORT FOR STOVE BUILDER INTERNATIONAL INC.
Report No.: 102163747MTL-001R1
Date: 08/31/21

For INTERTEK B&C:

COMPLETED BY:	Hussein Mortada, CPI.	**REVIEWED BY:**	Brian Ziegler
TITLE:	Engineer B&C, Intertek, Quebec	**TITLE:**	Technical Team Leader - Hearth
SIGNATURE:		**SIGNATURE:**	
DATE:	08/26/21	**DATE:**	08/31/21

aaa:bbb

This report is for the exclusive use of Intertek's Client and is provided pursuant to the agreement between Intertek and its Client. Intertek's responsibility and liability are limited to the terms and conditions of the agreement. Intertek assumes no liability to any party, other than to the Client in accordance with the agreement, for any loss, expense or damage occasioned by the use of this report. Only the Client is authorized to permit copying or distribution of this report and then only in its entirety. Any use of the Intertek name or one of its marks for the sale or advertisement of the tested material, product or service must first be approved in writing by Intertek. The observations and test results in this report are relevant only to the sample(s) tested. This report by itself does not imply that the material, product, or service is or has ever been under an Intertek certification program.

SECTION 3
TEST METHOD(S)

The specimen was evaluated in accordance with the following:

ASTM E2515-11- Standard Test Method for Determination of Particulate Matter Emissions Collected by a Dilution Tunnel

ASTM WK47329-14 (draft version of ASTM E3053-17) - Standard Test Method for Determining Particulate Matter Emissions from Wood Heaters using Cordwood Test Fuel. It is based on EPA letter dated January 21st, 2016.

CSA B415.1-10 - Performance Testing of Solid-Fuel-Burning Heating Appliances

8431 Murphy Drive
Middleton, WI 53562

Telephone: 608-836-4400
Facsimile: 608-831-9279
www.intertek.com/building

TEST REPORT FOR STOVE BUILDER INTERNATIONAL INC.
Report No.: 102163747MTL-001R1
Date: 08/31/21

SECTION 4
MATERIAL SOURCE

A sample was submitted to Intertek directly from the client. The sample was not independently selected for testing. The test unit was handed to the Intertek representative at client's facility in St-Augustin-de-Desmaures, Quebec. The unit was inspected upon receipt and found to be in good condition. The unit was set up following the manufacturer's instructions without difficulty.

Following assembly, the unit was placed on the test stand. Prior to begin the emissions tests, the manufacturer operated the unit for a minimum of 50 hours at medium burn rates to break-in the stove. The unit was found to be operating satisfactory during this break-in. The 50 plus hours of pre-burning were conducted from May 26th to June 2nd, 2016. The fuel used for the break-in process was beech cordwood. Table 1 shows the summary of the burn time in each test ran at medium burn rate; raw data is available on *Appendix F – Unit pre-burn documentation*.

Table 1 - Pre-burn time at medium burn rate summary

DATE	DURATION (MIN)	LOAD TYPE (-)	FUEL ADDED (LBS)	MOISTURE (% DB)
2016-05-26 (#457)	980	Medium fire	51.22	21.7
2016-05-30 (#460)	700	Medium fire	51.19	23.0
2016-05-31 (#461)	680	Medium fire	52.12	22.3
2016-06-02 (#462)	990	Medium fire	51.88	21.9
Total	3350	Minutes		
	55.83	Hours		

Following the pre-burn break-in process the unit was allowed to cool and ash and residue were removed from the firebox. The unit's chimney system and laboratory dilution tunnels were cleaned using standard wire brush chimney cleaning equipment. On June 7th, 2016, the unit was set-up for testing.

intertek
Total Quality. Assured.

8431 Murphy Drive
Middleton, WI 53562

Telephone: 608-836-4400
Facsimile: 608-831-9279
www.intertek.com/building

SECTION 5
EQUIPMENT

EQUIPMENT	INV NUMBER	CALIBRATION DUE	MU
Floor scale	SBI-014	March 31, 2017	± 0.012 kg
DGM system 1	SBI-046	August 03, 2016	±2% F.S.
DGM System 2	SBI-047	September 26, 2016	±2% F.S.
Reference DGM	SBI-103	September 02, 2016	±2% F.S.
Temperature acquisition	SBI-096	April 04, 2017	±0.5°F
Pitot tube type S*	SBI-239	June 09, 2016	±0.003 in.H_2O
Analytical scale	SBI-206	March 31, 2017	±0.17 mg
Table scale	SBI-222	March 31, 2017	±0.6 g
Hot wire anemometer*	SBI-241	June 09, 2016	±0.07 ft/min
Magnesense (tunnel)	SBI-250	September 03, 2016	±0.00015 in.H_2O
Magnesense (draft)	SBI-253	March 18, 2017	±0.00015 in.H_2O
DGM system 3	SBI-276	June 02, 2016	±2% F.S.
Relative humidity temperature meter	SBI-213	October 14, 2016	±3%
Moisture Content Standard	SBI-153	April 19, 2017	±0.2%
Multimeter	SBI-194	April 07, 2017	±1% Ω
Thermometer Calibrator	SBI-096	April 07, 2017	±0.5°F
Anemometer	SBI-097	April 22, 2017	±2.9 % Fpm
Mass flow meter	SBI-259	September 03, 2016	± 0.3% rdg
Mass flow meter	SBI-260	October 15, 2016	± 0.3% rdg

*Note: SBI-239 and SBI-241 were send to calibration after testing. Both were left “as is”. This has no impact on the certification data.

SECTION 6
LIST OF OFFICIAL OBSERVERS

NAME	COMPANY
Guillaume Thibodeau-Fortin	Stove Builder International inc.
Vincent Pelletier	Stove Builder International inc.
Claude Pelland, P.E.	Intertek B&C

8431 Murphy Drive
Middleton, WI 53562

Telephone: 608-836-4400
Facsimile: 608-831-9279
www.intertek.com/building

TEST REPORT FOR STOVE BUILDER INTERNATIONAL INC.
Report No.: 102163747MTL-001R1
Date: 08/31/21

SECTION 7
TEST PROCEDURE

From June 8th to June 10th, 2016, the unit was tested for EPA emissions. For wood stoves or wood insert, the test was conducted in accordance with ASTM WK47329 and ASTM E2515-11. The fuel used for the test run was beech cordwood.

The applicable EPA regulatory limits are:

Step 1 – 2015 – 4.5 grams per hour.
Step 2 – 2020 – 2.0 grams per hour with crib, 2.5 grams per hour with cordwood.

MANUFACTURER LOADING PROCEDURE

General: Use 16 inches beech cordwood for all loading types.

Kindling (8.0 lbs) - The kindling is made of 10 pieces of wood that are 10% of moisture content. Use finely split pieces on top, and bigger pieces on the bottom. Place four rows of kindling for lighting. Put 2 kindling pieces on the bottom brick in a North-South orientation. Then, put 2 other kindling pieces above the first one in an East-West orientation. Then, put four pieces on top in a north-south orientation and finally put two more pieces on top in an east-west orientation. Leave a little space between each piece. Place crumbled newspaper on top of the kindling (4 full sheets). Light up the paper and let the door ajar at 90° and wait approximately 5 minutes, then close the door. The fan is always OFF.

SUF (12.0 lbs) - When there is a coal bed of 2.2 lbs left, break coals and level coal bed, then add start-up fuel (four pieces). Put the first two pieces in the north-south orientation and a second row of two pieces in the east-west orientation. They should be 6 inches apart from each other on each row. Let burn for 30 minutes.

Low Pre-load (high fire) (42.8 lbs) - When there is a coal bed of 4.4 lbs, break coals and level coal bed. If there are non-breakable pieces, put them on the side. Add pre-load (six pieces). Place the 2 rows of three pieces in a north-south orientation. They should touch the rear bricks and be 1 ½ inch apart from each other. Put back on the top the non-breakable parts that have been put aside. Close the door immediately, leave air control fully open and let burn until the weight is down to 8.0 lbs (if there are visible flames near 9.0lbs, a short raking would help). Close the air controls (both primary and auxiliary air control). Start a timer for the minimum 1-hour of conditioning. Let burn until weight is down to 6.5 lbs and the average temperature is near 325°F, then rake.

Low fire load (51.3 lbs) - Place two rows of three pieces on the left side of the fire chamber in a north-south orientation then place on the right side of the two rows the seventh piece. They should be at approximately 1 inch apart from each other. Let the door ajar for 5 minutes and then close the door with the primary air control fully open. Wait for approximately two more minutes before closing manually the primary air control. Make sure the auxiliary air control is fully closed.

8431 Murphy Drive
Middleton, WI 53562

Telephone: 608-836-4400
Facsimile: 608-831-9279
www.intertek.com/building

The automatic primary air shut-off device will reduce the air intake when the inner thermostat temperature will be reached. The fan is fully opened when the insertion of the test load.

Medium Pre-load (high fire) (42.8 lbs) - Use the same method than for low burn rate except the following: At 12 lbs, close the primary air control and open the auxiliary air control for minimum of 1h-conditioning period. If there are visible flames near 9.0lbs, a short raking would help. Let burn until weight is down to 8.0 lbs and the average temperature is near 400°F, then rake.

Medium fire load (51.3 lbs) - Use the same method than for low burn rate except that the auxiliary air control should be full open.

High fire load (42.8lbs) – When there is a coal bed of 4.4 lbs, break coals and level coal bed. If there are non-breakable pieces, put them on the side. Add high fire load (six pieces). Place the 2 rows of three pieces in a north-south orientation. They should touch the rear bricks and be 1 ½ inch apart from each other. Put back on the top the non-breakable parts that have been put aside. Close the door immediately, leave air control fully open until all fuel is consumed and the scale is back to 4.4 lbs. The fan is fully opened when the insertion of the test load.

TEST SET-UP DESCRIPTON

A 8” flue is connected to a standard 8” diameter insulated chimney system installed to 15’ above floor level.

AIR SUPPLY SYSTEM

Combustion air enters at the bottom-right of the heater, which is directed to the firebox with flexible pipe. All gases exit through the 8” flue located on top of the heater.

TEST FUEL PROPERTIES

The species of fuel used was beech. The fuel was split cordwood of nominal length of 16 inches ± 1 inch. The fuel was dried in air to an average moisture content between 18% and 28% on a dry basis. Cordwood fuel was loaded from in a north-south orientation into the firebox per manufacturer’s instructions.

SAMPLING LOCATIONS

Particulate samples are collected from the dilution tunnel at point 20 feet from the tunnel entrance. The tunnel has two elbows and a mixing section in the system ahead of the sampling section. (See Figure 1.) The sampling section is a continuous 13-foot section of 8-inch diameter pipe straight over its entire length. Tunnel velocity pressure is determined by a type “S” Pitot tube located 100 inches from the beginning of the sampling section. The dry bulb thermocouple is

8431 Murphy Drive
Middleton, WI 53562

Telephone: 608-836-4400
Facsimile: 608-831-9279
www.intertek.com/building

located on the pitot tube. Tunnel samplers are located 48 inches downstream of the Pitot tube and 36 inches upstream from the end of this section. (See Figure 1.)

Stack gas samples are collected from the steel chimney section 8 feet ± 6 inches above the scale platform.

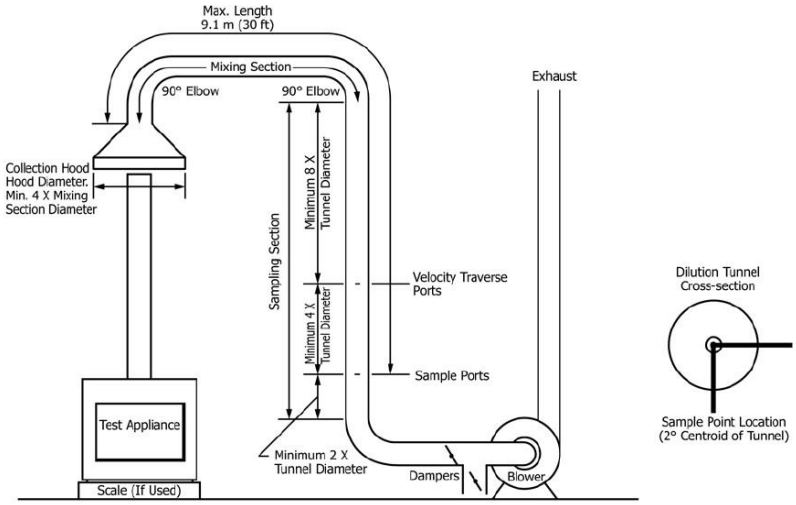

Figure 1 - Dilution tunnel

SAMPLING METHODS

PARTICULATE SAMPLING

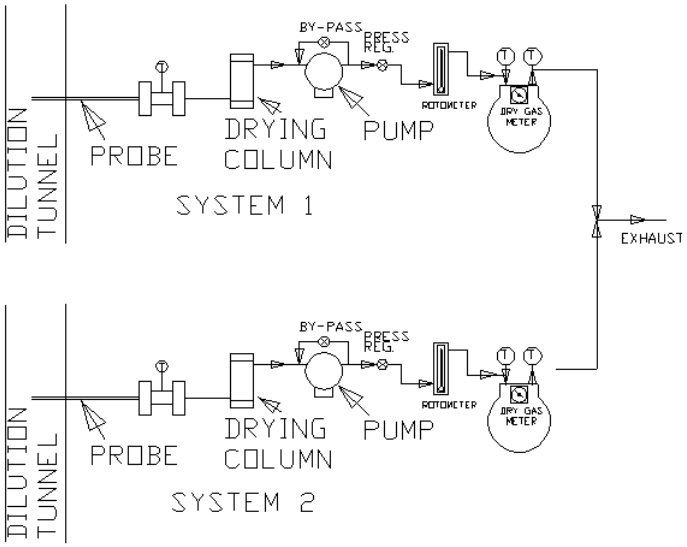

Figure 2 - Stack gas sample train

8431 Murphy Drive
Middleton, WI 53562

Telephone: 608-836-4400
Facsimile: 608-831-9279
www.intertek.com/building

Particulates were sampled in strict accordance with ASTM E2515-2011. Schematic is presented on Figure 2. This method uses two identical sampling systems with Pall TX-40, 47-mm diameter filters. The dryers used in the sample systems are filled with "Drierite" before each test run. In order to measure first-hour emissions rates, a third filter set is prepared at one hour into the test run, the filter sets are changed in one of the two sample trains. The two filter sets used for this train are analysed individually to determine the first hour and total emissions rate.

At the conclusion of each test program the dry gas meters are checked against our standard dry gas meter. Three runs are made on each dry gas meter used during the test program. The average calibration factors obtained are then compared with the six-month calibration factor and, if within 5%, the six-month factor is used to calculate standard volumes. Results of this calibration are contained in Appendix E.

An integral part of the post-test calibration procedure is a leak check of the pressure side by plugging the system exhaust and pressurizing the system to 10" W.C. The system is judged to be leak free if it retains the pressure for at least 10 minutes.

The standard dry gas meter is calibrated every 6 months using a Spirometer designed by the EPA Emissions Measurement Branch. The process involves sampling the train operation for 1 cubic foot of volume. With readings made to .001 ft^3, the resolution is .1%, giving an accuracy higher than the ±2% required by the standard.

STACK SAMPLE ROTAMETER

The stack sample rotameter is checked by running three tests at each flow rate used during the test program. The flow rate is checked by running the rotameter in series with one of the dry gas meters for 10 minutes with the rotameter at a constant setting. The dry gas meter volume measured is then corrected to standard temperature and pressure conditions. The flow rate determined is then used to calculate actual sampled volumes.

GAS ANALYZERS

The continuous analyzers are zeroed and spanned before each test with appropriate gases. A mid-scale multi-component calibration gas is then analyzed (values are recorded). At the conclusion of a test, the instruments are checked again with zero, span and calibration gases (values are recorded only). The drift in each meter is then calculated and must not exceed 5% of the scale used for the test.

At the conclusion of each unit test program, a three-point calibration check is made. This calibration check must meet accuracy requirements of the applicable standards. Consistent deviations between analyser readings and calibration gas concentrations are used to correct data before computer processing. Data is also corrected for interferences as prescribed by the instrument manufacturer's instructions.

intertek
Total Quality. Assured.

8431 Murphy Drive
Middleton, WI 53562

Telephone: 608-836-4400
Facsimile: 608-831-9279
www.intertek.com/building

TEST METHOD PROCEDURES

LEAK CHECK PROCEDURES

Before and after each test, each sample train is tested for leaks. Leakage rates are measured and must not exceed 0.02 CFM or 4% of the sampling rate. Leak checks are performed checking the entire sampling train, not just the dry gas meters. Pre-test and post-test leak checks are conducted with a vacuum of 10 inches of mercury. Vacuum is monitored during each test and the highest vacuum reached is then used for the post-test vacuum value. If leakage limits are not met, the test run is rejected. During, these tests the vacuum was typically less than 2 inches of mercury. Thus, leakage rates reported are expected to be much higher than actual leakage during the tests.

TUNNEL VELOCITY/FLOW MEASUREMENT

The tunnel velocity is calculated from a center point Pitot tube signal multiplied by an adjustment factor. This factor is determined by a traverse of the tunnel as prescribed in EPA Method 1. Final tunnel velocities and flow rates are calculated from EPA Method 2, Equation 6.9 and 6.10. (Tunnel cross sectional area is the average from both lines of traverse.)

Pitot tubes are cleaned before each test and leak checks are conducted after each test.

PM SAMPLING PROPORTIONALITY

Proportionality was calculated in accordance with ASTM E2515-11. The data and results are included in Appendix B.

DEVIATIONS FROM STANDARD METHOD:

The following deviations were requested by EPA on January 21st, 2016 letter:

Changes to ASTM WK47329 are:

1. The wood heater must be aged for 50 hours as stated in Appendix A-8 Part 60 Test Methods 26 through 30B, procedures section 2.1.4 and not the 48 hours as stated in WK47329 section 9.1.4.
2. The end of the test criterion is defined when the weight scale indicates the remaining of the test fuel as 0.0 lbs (0.00kg) or les for 30 seconds. This criterion should be used for the high fire, low and medium burn rates.
3. Section 9.5.1 Start-up Condition. The average heater surface temperature per 9.2.2 and the flue-gas temperature per 9.2.4 at the start of the test run must be less than a 10°F above ambient for the high fire test category.

4. Section 9.6.14 Invalid Test Run. The test run shall be considered invalid if less than the full test fuel weight has been consumed and there is no measurable weight loss (<0.1 lb (0.05kg) or 1.0% of the test fuel weight, whichever is greater) for at least 30 minutes.
5. Coal bed conditions prior to loading test fuel. The coal bed should be a level plane without valleys or ridges for all test runs in the high fire, low and medium burn rate categories.
6. The pre burn cycle burn rate category, leading into a test run, should be the same as the attempted burn rate category of the actual test. Example: If a low burn category is the desired test, the pre burn should be at a low burn setting and likewise for a medium low, medium high and high burn rate categories.

Changes to ASTM E2515-11 must be as followed:

1. The filter temperature must be maintained between 80- and 90-Degrees F during testing.
2. A glass cyclone must be used between the sampling probe and the filter holders when the total particulate catch is expected to exceed 100 mg or when water droplets are present in the stack gas. This cyclone and its contents must be included in the pre-test weighing and post-test desiccation and weighing.
3. Filters must be weighed in pairs to reduce weighing error propagation. See ASTM E2515-11 Section 10.2.1 Analytical Procedure.
4. Sample filters must be Pall TX-40 or equivalent Teflon coated glass fiber, and of 47 mm, 90mm, 100mm or 110mm in diameter.
5. Only one point is allowed outside the +/- 10% proportionality range per test run.

A deviation was performed for the measurement of first hour of particulate matter emissions. A third independent and complete sampling train was installed. During the development of ASTM WK47329, some labs observed that doing a filter switch on one of the sampling train ended most of the time in a deviation between the two filter trains. That is the rationale for using a third independent sampling train.

No other deviations from the standard were performed, however, only applicable sections of standards were used during all testing.

SECTION 8
TEST CALCULATIONS

Weight of test fuel load, dry basis ASTM WK47329

$$M_{Fldb} = \Sigma((M_{FLnwb})(100)/(100+MC_{FLn}))$$

where:

M_{FLdb} = weight of test fuel load, dry basis, lb (kg);
M_{FLnwb} = weight of each test fuel piece, *n*, in test fuel load per 8.4.1, wet basis, lb (kg);
MC_{FLn} = average fuel moisture of test fuel piece, *n*, in test fuel load, % dry basis; and

8431 Murphy Drive
Middleton, WI 53562

Telephone: 608-836-4400
Facsimile: 608-831-9279
www.intertek.com/building

n = individual test fuel pieces that comprise the test fuel load, as applicable.

Weighted Average Determination ASTM WK47329

$$Vi_{WA} = 0.4(Vi_{LAve}) + 0.4(Vi_{MAve}) + 0.2(Vi_{HAve})$$

where:

Vi_{WA} = Weighted average for variable *i*;

Vi = Test result variable (Particulate Matter: g/h, g/kg, lb/MMBtu; % Overall Efficiency: HHV, LHV; Carbon Monoxide: g/h, etc.)

Vi_{LAve} = Arithmetic average for variable *Vi* for all test runs (except per 8.6.13 or 8.9) that are included in the low fire burn rate category

Vi_{MAve} = Arithmetic average for variable *Vi* for all test runs (except per 8.6.13 or 8.9) that are included in the medium fire burn rate category;

Vi_{HAve} = Arithmetic average for variable *Vi* for all test runs (except per 8.9) that are included in the high fire burn rate category.

NOMENCLATURE FOR ASTM E2515:

A = Cross-sectional area of tunnel m2 (ft2).

B_{ws} = Water vapor in the gas stream, proportion by volume (assumed to be 0.02 (2.0 %)).

C_p = Pitot tube coefficient, dimensionless (assigned a value of 0.99).

c_r = Concentration of particulate matter room air, dry basis, corrected to standard conditions, g/dscm (gr/ dscf) (mg/dscf).

c_s = Concentration of particulate matter in tunnel gas, dry basis, corrected to standard conditions, g/dscm (gr/dscf) (mg/dscf).

E_T = Total particulate emissions, g.

F_p = Adjustment factor for center of tunnel pitot tube placement.

$F_p = V_{strav}/V_{scent}$

K_P = Pitot Tube Constant, 34.97 $\frac{m}{\sec}\left[\frac{\left(\frac{g}{g}\blacksquare mole\right)(mm\ Hg)}{(K)(mm\ water)}\right]^{\frac{1}{2}}$

or

= Pitot Tube Constant, 85.49 $\frac{ft}{\sec}\left[\frac{\left(\frac{lb}{lb}-mole\right)(in\ Hg)}{(R)(in\ water)}\right]^{\frac{1}{2}}$

L_a = Maximum acceptable leakage rate for either a pretest or post-test leak- check, equal to 0.0003 m3/min (0.010 cfm) or 4 % of the average sampling rate, whichever is less.

L_p = Leakage rate observed during the post-test leak-check, m3/min (cfm).

m_p = mass of particulate from probe, mg.

m_f = mass of particulate from filters, mg.

m_g = mass of particulate from filter gaskets, mg.

8431 Murphy Drive
Middleton, WI 53562

Telephone: 608-836-4400
Facsimile: 608-831-9279
www.intertek.com/building

m_r = mass of particulate from the filter, filter gasket, and probe assembly from the room air blank filter holder assembly, mg.

m_n = Total amount of particulate matter collected, mg.

M_s = the dilution tunnel dry gas molecular weight (may be assumed to be 29 g/g mole (lb/lb mole).

P_{bar} = Barometric pressure at the sampling site, mm Hg (in. Hg).

P_g = Static Pressure in the tunnel (in. water).

P_R = Percent of proportional sampling rate.

P_s = Absolute average gas static pressure in dilution tunnel, mm Hg (in. Hg).

P_{std} = Standard absolute pressure, 760 mm Hg (29.92 in. Hg).

Q_{std} = Average gas flow rate in dilution tunnel.

$Q_{std} = 60 (1 - B_{ws}) V_s A [T_{std} P_s/T_s P_{std}]$

dscm/min (dscf/min).

T_m = Absolute average dry gas meter temperature, K (R).

T_{mi} = Absolute average dry gas meter temperature during each 10-min interval, *i*, of the test run.

$$T_{mi} = (T_{mi(b)} + T_{mi(e)})/2$$

where:

$T_{mi(b)}$ = Absolute dry gas meter temperature at the beginning of each 10-min test interval, i, of the test run, K (R), and

$T_{mi(e)}$ = Absolute dry gas meter temperature at the end of each 10-min test interval, i, of the test run, K (R).

Ts = Absolute average gas temperature in the dilution tunnel, K (R).

Tsi = Absolute average gas temperature in the dilution tunnel during each 10-min interval, i, of the test run, K (R).

$$T_{si} = (T_{si(b)} + T_{m=si(e)})/2$$

where:

$T_{si(b)}$ = Absolute gas temperature in the dilution tunnel at the beginning of each 10-min test interval, i, of the test run, K (R), and

$T_{si(e)}$ = Absolute gas temperature in the dilution tunnel at the end of each 10-min test interval, i, of the test run, K (R).

V_m = Volume of gas sample as measured by dry gas meter, dcm (dcf).

V_{mc} = Volume of gas sampled corrected for the post test leak rate, dcm (dcf).

V_{mi} = Volume of gas sample as measured by dry gas meter during each 10-min interval, i, of the test run, dcm.

$V_{m(std)}$ = Volume of gas sample measured by the dry gas meter, corrected to standard conditions.

$$V_{m(std)} = K_1 V_m Y [(P_{bar} + (\Delta H/13.6))/T_m]$$

where:

K_1 = 0.3855 K/mm Hg for SI units and = 17.64 R/in. Hg for inch-pound units.

$$V_{m(std)} = K_1 V_{mc} Y [(P_{bar} + (\Delta H/13.6))/T_m]$$

where:

8431 Murphy Drive
Middleton, WI 53562

Telephone: 608-836-4400
Facsimile: 608-831-9279
www.intertek.com/building

V_{mc} = Vm– (Lp– La)u
V_{mr} = Volume of room air sample as measured by dry gas meter, dcm (dcf), and
$V_{mr(std)}$ = Volume of room air sample measured by the dry gas meter, corrected to standard conditions.

$$V_{m(std)} = K_1 V_{mr} Y [(P_{bar} + (\Delta H/13.6))/T_m]$$

Where:
K_1 = 0.3855 K/mm Hg for SI units and = 17.64 R/in. Hg for inch-pound units, and
V_s = Average gas velocity in the dilution tunnel.

$$V_s = F_p K_p C_p (\sqrt{\Delta P_{avg}})(\sqrt{(T_s/P_s M_s)})$$

V_{si} = Average gas velocity in dilution tunnel during each 10-min interval, i, of the test run.

$$V_{si} = F_p K_p C_p (\sqrt{\Delta P_i})(\sqrt{(T_{si}/P_s M_s)})$$

V_{scent} = Average gas velocity at the center of the dilution tunnel calculated after the Pitot tube traverse.
V_{strav} = Average gas velocity calculated after the multipoint Pitot traverse.
Y = Dry gas meter calibration factor.
ΔH = Average pressure at the outlet of the dry gas meter or the average differential pressure across the orifice meter, if used, mm water (in. water).
ΔP_{avg} = Average velocity pressure in the dilution tunnel, mm water (in. water).
ΔP_i = Velocity pressure in the dilution tunnel as measured with the Pitot tube during each 10-min interval, i, of the test run.

$$\Delta P_i = (\Delta P_{i(b)} + \Delta P_{i(e)})/2$$

where:
$\Delta P_{i(b)}$ = Velocity pressure in the dilution tunnel as measured with the Pitot tube at the beginning of each 10-min interval, i, of the test run, mm water (in. water), and
$\Delta P_{i(e)}$ = Velocity pressure in the dilution tunnel as measured with the Pitot tube at the end of each 10-min interval, i, of the test run, mm water (in. water).
θ = Total sampling time, min.
10 = ten min, length of first sampling period.
13.6 = Specific gravity of mercury.
100 = Conversion to percent.

TOTAL PARTICULATE WEIGHT – ASTM E2515

$$M_n = m_p + m_f + m_g$$

PARTICULATE CONCENTRATION – ASTM E2515

$$C_s = K_2(m_n/V_{m(std)}) \text{ g/dscm (g/dscf)}$$

where:
K_2 = 0.001 g/mg

TOTAL PARTICULATE EMISSIONS (g) – ASTM E2515

$$E_T = (C_s – C_r)Q_{std}\theta$$

8431 Murphy Drive
Middleton, WI 53562

Telephone: 608-836-4400
Facsimile: 608-831-9279
www.intertek.com/building

TEST REPORT FOR STOVE BUILDER INTERNATIONAL INC.
Report No.: 102163747MTL-001R1
Date: 08/31/21

PROPORTIONAL RATE VARIATION (%) – ASTM E2515

$$PR = [\theta(V_{mi}\ V_s\ T_m\ T_{si})/(10(V_m\ V_{si}\ T_s\ T_{mi})] \times 100$$

MEASUREMENT OF UNCERTAINTY – ASTM E2515

$$MU_{weighing} = \sqrt{0.1^2} \bullet X$$

GENERAL FORMULA – ASTM E2515

$$uY = \sqrt{((\delta Y/\delta x_1) \times u_1)^2 + \ldots + ((\delta Y/\delta x_n) \times u_n)^2}$$

Where:

$\delta Y/\delta x_i$ = Partial derivative of the combining formula with respect to individual measurement xi,
u_i = is the uncertainty associated with that measurement.

TOTAL PARTICULATE EMISSIONS – ASTM E2515

$$E_T = (c_s - c_r)\ Q_{std}\ \theta$$

where:

c_s = sample filter catch/(sample flow rate x test duration), g/dscf,
c_r = room background filter catch/(sample flow x sampling time), g/dscf,
Q_{std} = average dilution tunnel flow rate, dscf/min, and
θ = sampling time, minutes.

MU OF c_s

$c_s = F_c/(Q_{sample} \times \theta) = 0.025/(0.25 \times 180) = 0.0005555$
$\delta c_s/\delta F_c = 1/Q_{sample} \bullet \Theta = 1/0.25 \bullet 180 = 0.0222$
$\delta c_s/\delta Q_{sample} = -F_c/Q^2_{sample} \bullet \Theta = -0.025/0.25^2 \bullet 180 = -0.00222$
$\delta c_s/\delta \Theta = -F_c/Q_{sample} \bullet \Theta^2 = -0.025/0.25 \bullet 180^2 = -0.000003$
$MUc_s = \sqrt{(0.00027 \bullet 0.0222)^2 + (0.0025 \bullet - 0.00222)^2}$
$\sqrt{} + (0.1 \bullet - 0.000003)^2 = 0.0000091g$
Thus, c_s would be 0.555 mg/dscf ± 0.0081 mg/dscf at 95% confidence level.

MU OF c_r

$c_r = BG_c/(QBG \times \theta) = 0.002/(0.15 \times 180) = 0.000074$
$\delta c_r/\delta BG_c = 1/Q_{BG} \bullet \Theta = 1/0.15 \bullet 180 = 0.03704$
$\delta c_r/\delta Q_{BG} = -BG_c/Q^2_{BG} \bullet \Theta = -0.002/0.15^2 \bullet 180 = -0.0004938$
$\delta c_r/\delta \Theta = -BG_c/Q_{BG} \bullet \Theta^2 = -0.002/0.15 \bullet 180^2 = -0.0000004$
$MUc_r = \sqrt{(0.00027 \bullet 0.03704)^2 + (0.0015 \bullet - 0.0004938)^2}$
$\sqrt{} + (0.1 \bullet - 0.0000004)^2 = 0.00001g$
Thus, c_r would be 0.074 mg/dscf ± 0.01 mg/dscf at 95% confidence level.

8431 Murphy Drive
Middleton, WI 53562

Telephone: 608-836-4400
Facsimile: 608-831-9279
www.intertek.com/building

TEST REPORT FOR STOVE BUILDER INTERNATIONAL INC.
Report No.: 102163747MTL-001R1
Date: 08/31/21

E_T AND MU_{ET}

$E_T = (c_s - c_r)\ Q_{sd}\ \theta = (0.000555 - 0.000074) \times 150 \times 180 = 13.00g$
$\delta E_T/\delta c_s = Q_{std} \bullet \Theta = 150 \bullet 180 = 27{,}000$
$\delta E_T/\delta c_r = Q_{std} \bullet \Theta = 150 \bullet 180 = 27{,}000$
$\delta E_T/\delta Q_{std} = c_s \bullet \Theta - c_r \bullet \Theta = 0.000555 \bullet 180 - 0.000074 \bullet 180 = 0.08667$
$\delta E_T/\delta \Theta = c_s \bullet Q_{std} - c_r \bullet Q_{std} = 0.000555 \bullet 180 - 0.000074 \bullet 180 = 0.07222$
$MU_{ET} = \sqrt{(27{,}000 \bullet 0.0000081)^2 + (27{,}000 \bullet 0.00001)^2\ (0.08667 \bullet 3)^2}$
$\sqrt{} + (0.07222 \bullet 0.1)^2 = 0.436$

Thus the result in this example would be:
ET = 13.00g ± 0.44 g at a 95% confidence level.

EFFICIENCY – CSA B415.1

The change in enthalpy of the circulating air shall be calculated using the moisture content and temperature rise of the circulating air, as follows:

$$\Delta h = \Delta t\ (1.006 + 1.84x)$$

Where:
Δh = change in enthalpy, kJ/kg
Δt = temperature rise, °C
1.006 = specific heat of air, kJ/kg °C
1.84 = specific heat of water vapor, kJ/kg °C
x = humidity ratio, kg/kg

The equivalent duct diameter shall be calculated as follows:

$$ED = 2HW/H+W$$

Where:
ED = equivalent duct diameter
H = duct height, m
W = duct width, m

The air flow velocity shall be calculated as follows:

$$V = F_p \times C_p \times 34.97 \times \sqrt{T/28.56(P_{baro} + P_s)}$$

where
V = velocity, m/s
F_P = Pitot tube calibration factor determined from vane anemometer measurements
C_P = Pitot factor
= 0.99 for a standard Pitot tube or as determined by calibration for a Type S Pitot tube
34.97 = Pitot tube constant

8431 Murphy Drive
Middleton, WI 53562

Telephone: 608-836-4400
Facsimile: 608-831-9279
www.intertek.com/building

TEST REPORT FOR STOVE BUILDER INTERNATIONAL INC.
Report No.: 102163747MTL-001R1
Date: 08/31/21

Note: The Pitot tube constant is determined on the basis of the following units: m/s [g/g mole (mm Hg)/(K)(mm H_2O)]$^{0.5}$

ΔP = velocity pressure, mm H2O
T = temperature, K
28.56 = molecular weight of air
P_{Baro} = barometric pressure, mm Hg
P_s = duct static pressure, mm Hg

The mass flow rate shall be calculated as follows:

$$m = 3600VAp$$

where:
m = mass flow rate, kg/h
V = air flow velocity, m/s
3600 = number of seconds per hour
A = duct cross-sectional area, m2
p = density of air at standard temperature and pressure (use 1.204 kg/m3)

The rate of heat release into the circulating air shall be calculated using the air flow and change in enthalpy, as follows:

$$\Delta e = \Delta h \times m$$

Where:
Δe = rate of heat release into the circulating air, kJ/h
Δh = change in enthalpy of the circulating air, kJ/kg
m = mass air flow rate, kg/h

The heat output over any time interval shall be calculated as the sum of the heat released over each measurement time interval, as follows:

$$E_t = \sum(\Delta e \times i) \text{ for } i = t_1 \text{ to } t_2$$

Where:
Et = delivered heat output over any time interval t_2–t_1, kJ
i = time interval for each measurement, h

The average heat output rate over any time interval shall be calculated as follows:

$$e_t = E_t / t$$

where
e_t = average heat output, kJ/h
t = time interval over which the average output is desired, h

8431 Murphy Drive
Middleton, WI 53562

Telephone: 608-836-4400
Facsimile: 608-831-9279
www.intertek.com/building

The total heat output during the burn shall be calculated as the sum of all the heat outputs over each time interval, as follows:

$$E_d = \sum(E_t) \text{ for } t = t_0 \text{ to } t_{final}$$

Where:

E_d = heat output over a burn, kJ/h (Btu/h)
E_t = heat output during each time interval, kJ/h (Btu/h)

The efficiency shall be calculated as the total heat output divided by the total energy input, expressed as a percentage as follows:

$$\text{Efficiency, \%} = 100 \times E_d/I$$

Where:

E_d = total heat output of the appliance over the test period, kJ/kg
I = input energy (fuel calorific value as-fired times weight of fuel charge), kJ/kg (Btu/lb)

SECTION 9

TEST SPECIMEN DESCRIPTION

The HE350 Series is a factory-built fireplace manually fed constructed of carbon steel with a fire chamber lined with refractory stones. The outer dimensions are 24-inches deep from the face plate to the rear without the spacer, 41 1/4-inches high without spacers, and 45 1/4-inches wide without spacers. The units have a double door located on the front with a viewing glass.

FIREBOX VOLUME CALCULATION

The models from the HE350 Series have a usable firebox volume (UFV) of 4.28 cubic foot. Schematic of the firebox dimensions is presented on Figure 3. Please note that the fuel cannot be stacked any higher due to the secondary air tubes being at the top of the combustion chamber.

8431 Murphy Drive
Middleton, WI 53562

Telephone: 608-836-4400
Facsimile: 608-831-9279
www.intertek.com/building

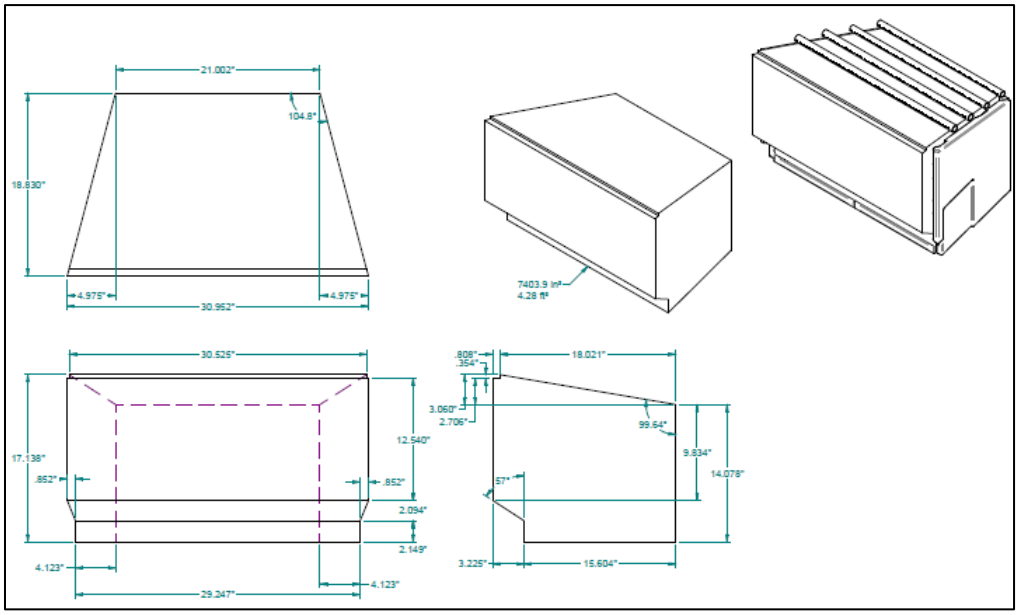

Figure 3 - Schematic of firebox volume

Firebox volume calculation is presented below:

$$UFV = V1 + V2 + V3 + V4 + V5 + V6 + V7 + V8 + V9 + V10 + V11 + V12 + V13 + V14 + V15 + V16 + V17 + V18$$

$$V1 = 9.834 \times 21.002 \times 18.830 = 3889.0\ in^3$$
$$V2 = 21.002 \times 2.094 \times 15.604 = 686.2\ in^3$$
$$V3 = 2.149 \times 21.002 \times 15.604 = 704.3\ in^3$$
$$V4 = (3.225 \times 21.002 \times 2.094) \div 2 = 70.9\ in^3$$
$$V5 = (21.002 \times 3.060 \times 18.021) \div 2 = 579.0\ in^3$$
$$V6 = (4.975 \times 18.830 \times 9.834) \div 2 = 460.6\ in^3$$
$$V7 = (4.975 \times 18.830 \times 9.834) \div 2 = 460.6\ in^3$$
$$V8 = (3.060 \times 4.975 \times 18.021) \div 3 = 91.4\ in^3$$
$$V9 = (3.060 \times 4.975 \times 18.021) \div 3 = 91.4\ in^3$$
$$V10 = 2.706 \times 0.808 \times 30.952 = 67.7\ in^3$$
$$V11 = (4.123 \times 2.094 \times 15.604) \div 2 = 67.4\ in^3$$
$$V12 = (4.123 \times 2.094 \times 15.604) \div 2 = 67.4\ in^3$$
$$V13 = (4.123 \times 2.149 \times 15.604) \div 2 = 69.1\ in^3$$
$$V14 = (4.123 \times 2.149 \times 15.604) \div 2 = 69.1\ in^3$$
$$V15 = (3.225 \times 2.094 \times 4.123) \div 2 = 13.9\ in^3$$
$$V16 = (3.225 \times 2.094 \times 4.123) \div 2 = 13.9\ in^3$$
$$V17 = ((0.852 \times 2.094) \div 2 \times 3.225) \div 3 = 1.0\ in^3$$
$$V18 = ((0.852 \times 2.094) \div 2 \times 3.225) \div 3 = 1.0\ in^3$$

8431 Murphy Drive
Middleton, WI 53562

Telephone: 608-836-4400
Facsimile: 608-831-9279
www.intertek.com/building

$$UFV = \ 7403.9\ in^3$$

$$UFV = \frac{7403.9}{12^3} = 4.28\ ft^3$$

SECTION 10

TEST RESULTS

GENERAL DISCUSSION:

All burn rate categories were achieved, and all data were used in the calculation of the weighted average.

All test fuel pieces have been positioned in a North-South orientation as per the manufacturer's written instructions. All test fuel pieces were split to meet individual and total load weight range for the firebox. Test fuel pieces were split in order to preserve the bark. In the area without bark, splitting was done to represent the random shape of the wood as it can be found in a standard cord of wood. No test fuel pieces were voluntary squared.

The test run has been found to be appropriate, with no anomalies, and the test run has been validated and is deemed compliant. No negative weight was found on the filters, as the filters and gaskets are weighed together to eliminate filter material transfer to gaskets. All weightings were handled property, with no negative weight on gaskets or probes. For Run #2, the dual train comparison as defined in ASTM E2515-11, section 11.7, does comply by weight (0.26 g/kg with a limit of 0.5 g/kg) although it does not comply by percentage (18.6% with a limit of 7.5%).

DESCRIPTION OF TEST RUNS:

RUN #1 (June 8th, 2016) - Primary air control was set to fully open. Kindling, start-up fuel and fuel were loaded per manufacturer's instructions. (See owner's Manual Appendix D) Convection blower was on max speed for the full duration of the test. The total fuel load including kindling and start-up fuel weighed 62.88 lb. The main fuel load was loaded with a coal bed of 4.4 lb. Burn time was 320 minutes. The burn rate of the hot-to-hot cycle was 3.86 kg/hr. The particulate emissions were 2.89 g/h.

RUN #2 (June 9th, 2016)- Primary air control was set to fully open for the first 7 minutes and completely closed for the remainder of the test. Fuel was loaded by 100 seconds. Convection blower was on max speed for the full duration of the test. The test load weighed 51.83 lb and was loaded with a coal bed of 6.56 lb. Burn time was 770 minutes. The burn rate was 1.49 kg/hr. The particulate emissions were 1.49 g/h. The control so set yielded a low burn-rate as defined by Clause 9.7.1 of WK47329 using the burn time criteria.

RUN #3 (June 10th, 2016) - Primary air control was set to fully open for the first 7 minutes. Following this period, the primary air control was completely closed and the auxiliary air control fully opened (See product drawings). Fuel was loaded by 60 seconds. Convection blower was on

8431 Murphy Drive
Middleton, WI 53562

Telephone: 608-836-4400
Facsimile: 608-831-9279
www.intertek.com/building

max speed for the full duration of the test. The test load weighed 51.38 lb and was loaded with a coal bed of 8.10 lb. Burn time was 680 minutes. The burn rate was 1.67 kg/hr. The particulate emissions were 1.08 g/h. The control so set yielded a medium burn-rate (below mid-point between low and maximum burn-rate).

RESULT TABLES:

Table 2 to Table 9 present the results of the evaluation. On section 14, Table 10 to Table 13 present the results as per the adjunct summary sheet of ASTM WK47329-17.

Table 2 - EMISSION RESULTS

#	TEST DATE	BURN RATES (kg/hr) (Dry)	PM EMISSION RATE (g/hr)	1ST HOUR EMISSIONS (g)	CO EMISSION RATE (g/hr)	CO EMISSION RATE (g/min)	HEATING EFF. (% HHV)
1	2016-06-08	3.863	2.89	3.43	219	3.65	62%
2	2016-06-09	1.488	1.49	11.4	166	2.77	64%
3	2016-06-10	1.666	1.08	14.4	119	1.98	65%

Table 3 - FUEL DATA SUMMARY

#	KINDLING WEIGHT (LBS)	KINDLING MC (%DB)	SU FUEL WEIGHT (LBS)	SU FUEL MC (%DB)	HIGH WEIGHT (LBS)	HIGH MC (%DB)	LOW/MED WEIGHT (LBS)	LOW/MED MC (%DB)
1	7.56	10	12.10	20.9	43.22	21.78	NA	NA
2	7.72	10	12.08	21.6	42.31	23.2	51.83	23.1
3	8.28	10	12.187	22.4	41.71	22.9	51.38	23.4

Table 4 - TEST LAB CONDITIONS

#	AMB. TEMP. (°F) before	AMB. TEMP. (°F) after	PRESSURE (In. Hg) before	PRESSURE (In. Hg) after	R.H.% % before	R.H.% %% after	AIR VEL. (Ft/min) before	AIR VEL. (Ft/min) after
1	62	65	29.4	29.4	71	64	0	0
2	77	75	29.6	29.8	74	91	0	0
3	76	78	29.8	29.9	89	50	0	0

Table 5 - DILUTION TUNNEL

#	BURN TIME (min)	TUNNEL VELOCITY (ft/sec)	VOLUMETRIC FLOW RATE (dscf/min)	TUNNEL AVE. TEMP. (°R)	SAMPLE VOLUME (DSCF)	PARTICULATE CATCH (MG)

intertek
Total Quality. Assured.

8431 Murphy Drive
Middleton, WI 53562

Telephone: 608-836-4400
Facsimile: 608-831-9279
www.intertek.com/building

TEST REPORT FOR STOVE BUILDER INTERNATIONAL INC.
Report No.: 102163747MTL-001R1
Date: 08/31/21

					1	2	1	2
1	320	21.654	384.55	599.40	28.268	28.433	4.2	2.9
2	770	20.479	394.63	558.04	65.901	70.658	4.2	4.4
3	680	20.741	401.22	558.69	61.585	60.756	2.7	2.8

Table 6 - DILUTION TUNNEL PRECISION

#	SAMPLE RATIOS (-)		TOTAL EMISSIONS (g)		DEVIATION %	DEVIATION g/kg
	Train 1	Train 2	Train 1	Train 2		
1	4353	4328	18.28	12.55	18.59	0.26
2	4611	4301	19.37	18.92	1.16	0.02
3	4430	4491	11.96	12.57	2.50	0.03

Table 7 - GENERAL SUMMARY

#	BURN RATE (kg/hr)(Dry)	CHANGE IN SURFACE TEMP. (°F)	INITIAL DRAFT (in. wc)	RUN TIME (min)	AVERAGE DRAFT (in. wc)
1	3.863	311	0.007	320	0.067
2	1.488	112	0.035	770	0.044
3	1.666	147	0.044	680	0.050

Table 8 - CSA B415.1-10 SUMMARY

#	CO EMISSIONS (g/min)	HEATING EFFICIENCY (% HHV)	HEATING EFFICIENCY (% LHV)	HEAT OUTPUT (Btu/hr)
1	3.65	62.4	66.8	43,000
2	2.80	63.8	68.3	16,900
3	2.00	65.4	70.0	19,400

Table 9 - WEIGHTED AVERAGE CALCULATION

#	CAT	(E) PM EMISSION RATE (g/hr)	(CO) EMISSION RATE (g/hr)	HEAT OUTPUT Btu/hr	EFF. (% HHV)	EFF. (% LHV)	(K) Weighting Factor	(KxE) g/hr	(KxCO) g/hr	(KxCO) g/min	(K x HHV)	(K x LHV)
1	H	2.891	218.6	43,000	62.4	66.8	20%	0.578	43.7	0.73	12.5	13.4
2	L	1.492	168.0	16,900	63.8	68.3	40%	0.597	67.2	1.12	25.5	27.3
3	M	1.082	120.3	19,400	65.4	70	40%	0.433	48.1	0.80	26.2	28.0
						Totals:	**100%**	1.6	159	2.7	64	69

8431 Murphy Drive
Middleton, WI 53562

Telephone: 608-836-4400
Facsimile: 608-831-9279
www.intertek.com/building

SECTION 11
CONCLUSION

This test demonstrates that the FP-15 Waterloo (HE350 Series) factory-built fireplace is an affected facility under the definition given in the regulation. The emission rate of 1.6 g/hr meets the EPA requirements for the Step 2 limits.

FP-15 Waterloo is a representative model of the HE350 Series. This series includes the following models: FP-15 Waterloo, FP-15A Waterloo, Horizon, Monaco XL, WFP100 and St. Clair 4300.

8431 Murphy Drive
Middleton, WI 53562

Telephone: 608-836-4400
Facsimile: 608-831-9279
www.intertek.com/building

SECTION 12
PHOTOGRAPHS

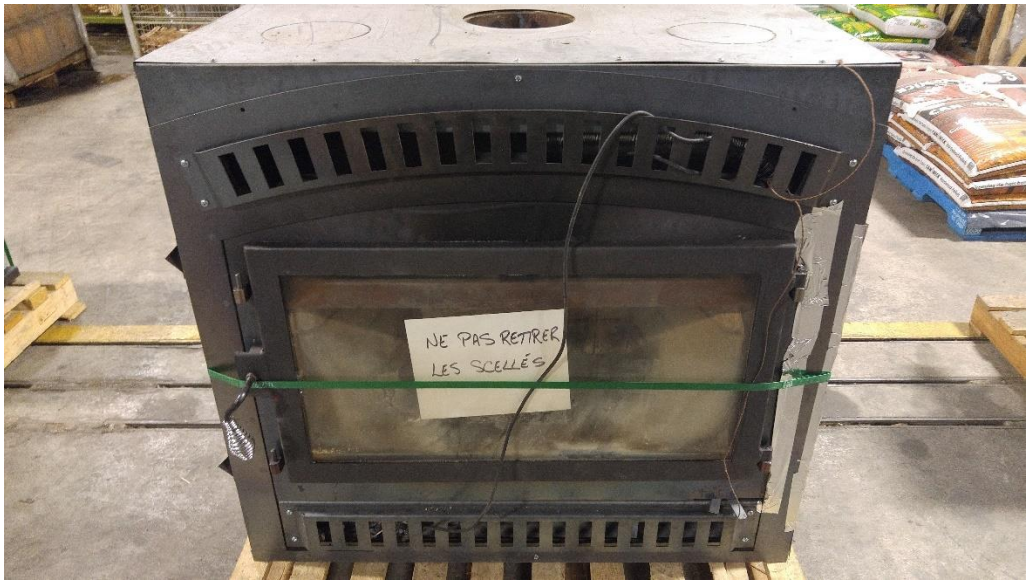

Figure 3 - Front view of unit



Figure 4 - Typical load

8431 Murphy Drive
Middleton, WI 53562

Telephone: 608-836-4400
Facsimile: 608-831-9279
www.intertek.com/building

TEST REPORT FOR STOVE BUILDER INTERNATIONAL INC.
Report No.: 102163747MTL-001R1
Date: 08/31/21

SECTION 13
REVISION LOG

REVISION #	DATE	PAGES	REVISION
0	07/08/16	N/A	Original Report Issue
1	08/12/21	All	Re-branding of the test report
		3	Correction of CO in g/min from 2.6 to 2.7 due to correction of % MC wet
		4	Addition of the pre-burn summary table
		5	Addition of Equipment Table
		6	Addition of Manufacturer's loading procedure
		10-11	Addition of all deviation from standard
		11-19	Addition of Sample Calculation
		18-19	Addition of UFV calculation
		20	Addition of General Discussion section
		20	Correction of all burn rates (%MC Wet was corrected twice)
		20	Correction of High Fire burn rate, was calculate for whole test run, should be only for hot-to-hot cycle.
		21-22	Addition of Table 2 to Table 9
		24	Addition of pictures
		26-29	Correction of Tables in Section 14 following the % MC Wet correction (CO, Heat output and Efficiency)
	08/17/21	38	Addition of manufacturer loading procedure (appendix)
		40	Addition of run notes (appendix)
		56,57,86,87 114,115	Modification of dry burn rate (appendix)
		555	Addition of federal requirement in manuals
		557	Modification of Heat output, efficiency and CO rate in manuals
		572	Addition of EPA loading procedure in the manuals
		1045	Addition of fuel load calculator for pre-burn (appendix)
		1049-1057	Correction of the wood moisture (% wet) and change in the results (CO, Heat Output, burn rate) (appendix)
		1058-1068	Addition of description for all photographs (appendix)

intertek
Total Quality. Assured.

8431 Murphy Drive
Middleton, WI 53562

Telephone: 608-836-4400
Facsimile: 608-831-9279
www.intertek.com/building

TEST REPORT FOR STOVE BUILDER INTERNATIONAL INC.
Report No.: 102163747MTL-001R1
Date: 08/31/21

SECTION 14

APPENDIX - REPORT TABLES AS PER ASTM WK47329

Table 10 - Section 1 - Model Identification

SECTION 1 – Model Identification	
Model Name(s)/Number(s)	HE350 Series (FP-15)
Manufacturer	Stove Builder International Inc.
Address 1	250 Copenhague
Address 2	Saint-Augustin-de-Desmaures, Quebec
Appliance Category(s) (Free-standing, Insert, etc.)	Factory-built fireplace
Usable Firebox Volume - ft^3	4.276
Catalytic/Non-Cat	Non-Cat
Convection Air Fan (No, Standard, Optional)	Standard
SECTION 1B – Laboratory Information	
Testing Laboratory	Intertek Testing Services NA Inc.
Address 1	1829, 32nd Avenue
Address 2	Lachine, Quebec H8T 3J1
ISO/Accreditation Info	ISO 17025
Dates Tested	June 8th to June 10th, 2016
Test Methods/Standards	WK 47329 November 2015 draft, ASTM E2515
Dilution Tunnel Inside Diameter - in.	8 in.
Fliter Diameter - mm	47
Filter Material	Pall TX40

Table 11 - Section 2 - Test Conditions Summary

SECTION 2 – Test Conditions Summary				
Model Name(s)/Number(s)	HE350 Series (FP-15)			
Usable Firebox Volume - ft^3	4.276			
Convection Air Fan (No, Standard, Optional)	Standard			
Test Run #	2	3	1	
Date Tested	2016-06-09	2016-06-10	2016-06-08	
Test Run Category (L, M, H)	L	M	H	
Average Barometric Pressure - in Hg	29.70	29.85	29.40	
Max. Observed Ambient Temp - °F	83	80	87	
Min. Observed Ambient Temp - °F	65	70	77	

intertek
Total Quality. Assured.

8431 Murphy Drive
Middleton, WI 53562

Telephone: 608-836-4400
Facsimile: 608-831-9279
www.intertek.com/building

TEST REPORT FOR STOVE BUILDER INTERNATIONAL INC.
Report No.: 102163747MTL-001R1
Date: 08/31/21

Max. Observed Filter Temp - °F	87	90	89	
Test Run Air Settings				
Primary (measured up from minimum)	Minimum	Minimum Auxiliary Max	Maximum	
Secondary (measured up from minimum)	Minimum	Minimum	Maximum	
Convection Air Fan Setting	Maximum	Maximum	Maximum	
Test Fuel Load				
Cordwood Fuel Species	Beech	Beech	Beech	
Specific Gravity (from Table 1)	0.67	0.67	0.67	
Higher Heating Value - Btu/lb (from Annex A1)	8088	8088	8088	
Nom. Test Fuel Load Piece Length - in.	16	16	16	
Number of Test Fuel Pieces	7	7	6	
Test Fuel Weight				
Kindling - As Fired lb	na	na	7.56	
Kindling Wt. - As % of Test Fuel Load	na	na	17.5%	
Kindling Moisture - % DB	na	na	10%	
Kindling - kg DB	na	na	3.12	
SU Fuel - As Fired lb	na	na	12.10	
SU Fuel Wt. - As % of Test Fuel Load	na	na	28.0%	
SU Fuel Moisture - % DB	na	na	20.9%	
SU Fuel - kg DB	na	na	4.54	
Test Fuel Load - As Fired lb	51.83	51.38	43.22	
Ave. Test Fuel Load MC % DB	23.1	23.4	21.78	
Test Fuel Load - kg DB	19.09	18.88	16.10	
Test Fuel Loading Density - lb/ft^3	12.12	12.02	10.11	
Residual SU Fuel Wt. - As Fired lb	6.6	8.1	4.4	
Residual SU Fuel Wt. - As % of Test Fuel Load	na	na	10.2%	
Test Run Duration - minutes	770	680	320	
Test Run Duration – h (including cold-start)	12.83	11.33	5.33	
Test Fuel Load Wt. at End of Test - As Fired lb	0	0	0	
Total Total Fuel Burned - kg DB	19.09	18.88	21.75	
% Test Fuel Load Wt. at End of Test	0.0%	0.0%	0.0%	

intertek
Total Quality. Assured.

8431 Murphy Drive
Middleton, WI 53562

Telephone: 608-836-4400
Facsimile: 608-831-9279
www.intertek.com/building

Table 12 - Section 3 - Test Run Results Summary

SECTION 3 – Test Run Results Summary

Model Name(s)/Number(s)	HE350 Series (FP-15)			
Usable Firebox Volume - ft^3	4.276			
Convection Air Fan (No, Standard, Optional)	Standard			
Test Run #	2	3	1	
Date Tested	6-9-16	6-10-16	6-8-16	
Test Run Category	L	M	H	
Burn Rate - kg/h DB	1.488	1.666	3.863	
Burn Rate - As % of Low to High Midpoint	na	62%	na	
Test Run Duration – h (excluding cold-start)	12.83	11.33	4.17	
Heat Output - Btu/h	16925	19428	42987	
Train 1 - g	19.37	11.96	18.28	
Train 2 - g	18.92	12.57	12.55	
Average	19.145	12.265	15.415	
PM Emission Train Precision - %	1.2%	-2.5%	18.6%	
PM Emission Train Precision - g/kg	0.02	-0.03	0.26	
PM Emission Rate - g/h	1.49	1.08	2.89	
First Hour Emissions - g	11.440	14.400	3.430	
First Hour Emissions - % of Total	60%	117%	22%	
Total CO Emissions - g	2156	1363	911	
CO Emissions Rate - g/h	168.00	120.26	218.64	
Overall Efficiency - CSA B415.1-10				
% HHV Basis	63.8	65.4	62.4	
% LHV Basis	68.3	70	66.8	

Table 13 - Section 4 - Weighted Average Summary

SECTION 4 - Weighted Average Summary

Model Name(s)/Number(s)	HE350 Series (FP-15)		
Usable Firebox Volume - ft_3	4.276		
Convection Air Fan (No, Standard, Optional)	Standard		
Average for Each Test Run Category	L	M	H
Burn Rate - kg/h DB	1.49	1.67	3.86
PM Emission Rate - g/h	1.49	1.08	2.89
CO Emissions Rate - g/h	168.0	120.3	218.6

8431 Murphy Drive
Middleton, WI 53562

Telephone: 608-836-4400
Facsimile: 608-831-9279
www.intertek.com/building

TEST REPORT FOR STOVE BUILDER INTERNATIONAL INC.
Report No.: 102163747MTL-001R1
Date: 08/31/21

Overall Efficiency - CSA B415.1-10			
% HHV Basis	63.8	65.4	62.4
% LHV Basis	68.3	70.0	66.8
Heat Output - Btu/h	16925	19428	42987
Category Weighting	40%	40%	20%

ASTM WK47329 Weighted Averages			
PM Emission Rate - g/h	1.6		
CO Emissions Rate - g/h	159		
Overall Efficiency - CSA B415.1-10			
% HHV Basis	64		
% LHV Basis	69		
Heat Output Range - Btu/h	16900	to	43000

1 of 11

Test load procedure for certification of HE350 Series factory-built fireplace using ASTM DRAFT WK47329 according to EPA letter of January 21st 2016

General: Use 16 inches beech cordwood for all loading types.

Low burn rate

Stove lighting: 8.0 lbs

Use 16 inches beech cordwood. The kindling is made of 10 pieces of wood that are 10% of moisture content. Use finely split pieces on top, and bigger pieces on the bottom. Place four rows of kindling for lighting. Put 2 kindling pieces on the bottom brick in a North-South orientation. Then, put 2 other kindling pieces above the first one in an East-West orientation. Then, put four pieces on top in a north-south orientation and finally put two more pieces on top in an east-west orientation. Leave a little space between each piece. Place crumbled newspaper on top of the kindling (4 full sheets). Light up the paper and let the door ajar at 90° and wait approximately 5 minutes, then close the door. The fan is always OFF.

Start-up fuel: 12.0 lbs

When there is a coal bed of 2.2 lbs left, break coals and level coal bed, then add start-up fuel (four pieces). Put the first two pieces in the north-south orientation and a second row of two pieces in the east-west orientation. They should be 6 inches apart from each other on each row. Let burn for 30 minutes.

Pre-load (high burn): 42.8 lbs

When there is a coal bed of 4.4 lbs, break coals and level coal bed. If there are non-breakable pieces, put them on the side. Add pre-load (six pieces). Place the 2 rows of three pieces in a north-south orientation. They should touch the rear bricks and be 1 ½ inch apart from each other. Put back on the top the non-breakable parts that have been put aside. Close the door immediately, leave air control fully open and let burn until the weight is down to 8.0 lbs (if there are visible flames near 9.0lbs, a short raking would help). Close the air controls (both primary and auxiliary air control). Start a timer for the minimum 1-hour of conditioning. Let burn until weight is down to 6.5 lbs and the average temperature is near 325°F, then rake.

Loading: 51.3 lbs

Place two rows of three pieces on the left side of the fire chamber in a north-south orientation then place on the right side of the two rows the seventh piece. They should be at approximately 1 inch apart from each other. Let the door ajar for 5 minutes and then close the door with the primary air control fully open. Wait for approximately two more minutes before closing manually the primary air control. Make sure the auxiliary air control is fully closed. The automatic primary air shut-off device will reduce the air intake when the inner thermostat temperature will be reached. The fan is fully opened when the insertion of the test load.

Guillaume Thibodeau-Fortin
2016-06-01

Medium burn rate

Stove lighting: 8.0 lbs

Use the same method than for low burn rate.

Start-up fuel: 12.0 lbs

Use the same method than for low burn rate.

Pre-load (high burn): 42.8 lbs

Use the same method than for low burn rate except the following:

At 12 lbs, close the primary air control and open the auxiliary air control for minimum of 1h-conditioning period. If there are visible flames near 9.0lbs, a short raking would help. Let burn until weight is down to 8.0 lbs and the average temperature is near 400°F, then rake.

Loading: 51.3 lbs

Use the same method than for low burn rate except that the auxiliary air control should be full open.

High burn rate

Note: For this test run, according to ASTM DRAFT WK47329, the sampling starts as soon as the kindling is ignited (cold start). For high fire test, due to the complexity of the computer program, we need to put a 2 kg weight on the scale prior to start the test. The computer will record the 2 kg (4.4 lbs) as the coal bed prior to load and the end of test criterion. After the kindling and start-up fuel are burned, the load is inserted, and the weight is removed.

Stove lighting: 8.0 lbs

Put the 2kg weight first. Same as low burn.

Start-up fuel: 12.0 lbs

Use the same method than for low burn rate except the loading should occur at 6.6 lbs because of the 2kg weight.

High burn: 42.8 lbs

When there is a coal bed of 8.8 lbs (4.4 lbs + 2kg weight), break coals and level coal bed. If there are non-breakable pieces, put them on the side. Add high fire load (six pieces). Place the 2 rows of three pieces in a north-south orientation. They should touch the rear bricks and be 1 ½ inch apart from each other. Put back on the top the non-breakable parts that have been put aside. Remove the 2 kg weight. Close the door immediately, leave air control fully open until all fuel is consumed and the scale is back to 4.4 lbs. The fan is fully opened when the insertion of the test load.

Guillaume Thibodeau-Fortin
2016-06-01

Date : June 8 . 2016
Manufacturer : SBi
Project : HE·350 FPIF Run# 1

Page ___ of ___
Model : NE·350
Tech/Engineer : [illegible] Reviewer :

COMMENTS :

Time : 1.5 min Ignition
" 5.49 min door closed
" 13:00 min Replace pieces that fell
" 35.31 Raking load (30 sec)
expected duration 25 minutes

@ 8.8 lbs load Time : 1:09:50
Break charcoal, put aside the non breakable parts which will be put aside and put on top of the load at the end.

Remove the 2 kg (adjustment weight)
Weight is now ≅ 47 lbs.

END 5h:20 weight ≅ 4.216 lbs

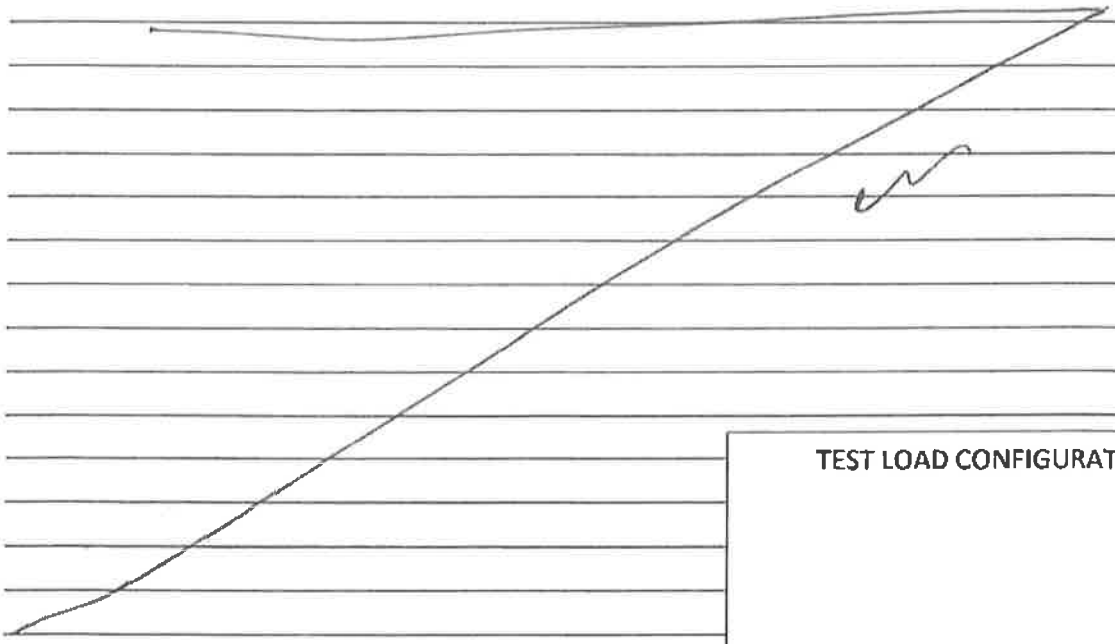

TEST LOAD CONFIGURATION

Date : June 9 · 2016
Manufacturer : SBi
Project : HE·350PP15 Run# 2

Page ___ of ___
Model : HE·350
Tech/Engineer : [signature] Reviewer : _____

COMMENTS :

T = 0 min light up of kindling ≈ 7.8 lbs on scale

T : 5 min close door

T : 27:48 min start-up loaded 2.2 lbs

T : 59':48" load of high burn load 46.25 lbs
on broken pieces are located on Top.

T : 2:53 Raking ≈ 15 sec
(h : 8:00 AM)

T : 3:04 Raking + low burn rate setting
↳ :0 (Reset Time)

@ T : 1:31 Raking

@ 10:21 ≡ 0 Load inserted

1:40 min Activation air entry opened + door ajar

3:32 reset load positioning

5:00 door closed

7:00 Trap Adjusted To close
will be closed when Trap T°
reaches 285°F (T° disc = 275F

1:05 (28 lbs) Traps have shut
automatically

TEST LOAD CONFIGURATION

[signature]

192-K-0602

Date : June 10, 2021
Manufacturer : SBi
Project : HE-350 FPIS Run# 3

Page ___ of ___
Model : HE-350
Tech/Engineer : [signature] Reviewer : _____

COMMENTS :

5:15 AM Shut for conditioning 312 lbs (Y:0) set

5:56 AM 39:12 min Raking 25 seconds

6:17 AM 1:01:00 Raking

6:45 AM 1:32:00 = 0 Load insertion leave door AJAR until frame appears.

1 min load time
30 seconds activation
Door opened until 5 min

6:34 Primary trap closed

45 min Trap shuts automatically

11:3" Raking 30 sec

TEST LOAD CONFIGURATION

November 20 Adjunct to ASTM E XXXX Wood Heater Cordwood Test Method

Cordwood Fuel Load Calculators - 10 lb/ft^3 Nominal Load Density

Core 45-65% of Total Load Weight, Remainder 35-55% of Total Load Weight

Values to be input manually

For All Usable Firebox Volumes - High Fire Test Only

Nominal Required Load Density (wet basis)	10	lb/ft^3				
Usable Firebox Volume	4.28	ft^3				
Total Nom. Load Wt. Target	42.76	lb				
Total Load Wt. Allowable Range	40.60	to	44.90	lb		
Core Target Wt. Allowable Range	19.20	to	27.80	lb		
Remainder Load Wt. Allowable Range	15.00	to	23.50	lb		
						Mid-Point
Core Load Pc. Wt. Allowable Range	6.40	to	10.70	lb		8.55
Remainder Load Pc. Wt. Allowable Range	4.30	to	23.50	lb		13.90
	Pc. #					
Core Load Piece Wt. Actual	1	7.36	lb	In Range		
	2	8.60	lb	In Range		
	3	8.63	lb	In Range		
Core Load Total. Wt. Actual		24.59	lb	In Range		
	Pc. #					
Remainder Load Piece Wt.	1	7.77	lb	In Range		
(1 to 3 Pcs.)	2	6.06	lb	In Range		
	3	4.80	lb	In Range		
Remainder Load Piece Weight Ratio - Small/Large		62%		In Range		≤ 67%
Remainder Load Tot. Wt. Act		18.63	lb	In Range		
Total Load Wt. Actual		43.22	lb	In Range		
Core % of Total Wt.		57%		In Range		45-65%
Remainder % of Total Wt.		43%		In Range		35-55%
Actual Load % of Nominal Target		101%		In Range		95-105%
Actual Fuel Load Density		10.1	lb/ft^3			
Kindling and Start-up Fuel						
Maximim Kindling Wt. (20% of Tot. Load Wt.)		8.64	lb			
Actual Kindling Wt.		7.56	lb	In Range		17.5%
Maximum Start-up Fuel Wt. (30% of Tot. Load Wt.)		12.97	lb			
Actual Start-up Fuel Wt.		12.10	lb	In Range		28.0%
Allowable Residual Start-up Fuel Wt. Range	4.3	to	8.6	lb		Mid-Point
Actual Residual Start-up Fuel Wt.		4.40	lb	In Range		6.5
Total Wt. All Fuel Added (wet basis)		62.87	lb			
High Fire Test Run End Point Range	Low		High			Mid-Point
Based on Fuel Load Wt. (w/tares)	3.9	to	4.8	lb		4.3
Actual Fuel Load Ending Wt.		0.0	lb	Out of Range		

THIS DOCUMENT IS NOT AN ASTM STANDARD; IT IS UNDER CONSIDERATION WITHIN AN ASTM TECHNICAL COMMITTEE BUT HAS NOT RECEIVED ALL APPROVALS REQUIRED TO BECOME AN ASTM STANDARD. IT SHALL NOT BE REPRODUCED OR CIRCULATED OR QUOTED, IN WHOLE OR IN PART, OUTSIDE OF ASTM COMMITTEE ACTIVITIES EXCEPT WITH THE APPROVAL OF THE CHAIRMAN OF THE COMMITTEE HAVING JURISDICTION AND THE PRESIDENT OF THE SOCIETY. *COPYRIGHT ASTM, 100 BARR HARBOR DRIVE, WEST CONSHOHOCKEN, PA 19428. ALL RIGHTS RESERVED.*

Fuel Piece Moisture Reading (%-dry basis)								
1	2	3	Ave.		Pc. Wt. Dry Basis			
21.5	25.4	13.9	20.3	In Range	6.12	lb	2.78	kg
22.7	21.7	22	22.1	In Range	7.04	lb	3.19	kg
24	17.1	17.1	19.4	In Range	7.23	lb	3.28	kg
23.2	24.2	21.9	23.1	In Range	6.31	lb	2.86	kg
23	24.3	23.5	23.6	In Range	4.90	lb	2.22	kg
32.3	18.6	19.7	23.5	In Range	3.88	lb	1.76	kg
Total Load Ave. MC (%-dry basis)			21.8	In Range				
Total Load Ave. MC % (wet basis)			17.9					
Total Test Load Weight (dry basis) →					35.49	lb	16.09	kg
Kindling Moisture (%-dry basis)								
10	10	10	10.0	In Range	6.87	lb	3.12	kg
Start-up Fuel Moisture Readings (%-dry basis)								
21.2	20.6666667		20.9	In Range	10.01	lb	4.54	kg
Total Wt. All Fuel Added (dry basis) →					52.36	lb	23.75	kg
Total Wt. All Fuel Burned (dry basis) →					48.0	lb	21.7	kg

Intertek

TEST FUEL DATA
EPA METHOD 5G-3

Project Number:	G102163747
Manufacturer:	SBI
Model:	HE350 Series
Sample ID Number:	QC20160608
Test Date:	8-Jun-16
Test Run Number:	1

Calibration Reference ID	SBI-153	
Set meter to Species 1		
Set Temperature to 70F	12%	12%
Set pin setting to 444	22%	22%

PRE-BURN FUEL PROPERTIES

Eq. ID No.:		Time:	9:35	Temp.,°F:	78.9
Piece No.	Length, In.	Weight, Lb.	Moisture, %, Dry Basis		
1		12.1	23.7	19.1	20.8
2			20.2	19.1	22.7
3					
4					
5					
6					
7					
8					
9					
10		7.557	—	10%	—
11					
12					
Total Weight		0.0	Average, %db		#DIV/0!

Allowable Fuel Load Range: **27** to **32.9**

TEST FUEL LOAD PROPERTIES

Eq. ID No.:	SBI-229		Time:	9:55	Temp.,°F:	78.9
Piece No.	Length, In.	Weight, Lb. 2x4	Weight, Lb. 4x4	Moisture, %, Dry Basis		
1	16	8.627		24.0	17.1	17.1
2	16 1/2	7.772		23.2	24.2	21.9
3	17	8.602		22.7	21.7	22.0
4	16 1/2	7.363		21.5	25.4	13.9
5	16	6.057		23.0	24.3	23.5
6	17	4.796		32.3	18.6	19.7
7						
8						
Totals		0.0	0.0			
% of Weight		#DIV/0!	#DIV/0!			
Total weight, wet, lb.		0.00		Average Moisture, dry		#DIV/0!
Total weight, dry, kg		#DIV/0!		Average Moisture, wet		#DIV/0!

Test Engineer: _____ Date: 8-JUN-2016

Intertek

Dillution Tunnel Velocity Traverse
EPA Method 5G-3

Project Number: G102163747
Manufacturer: SBI
Model: HE 350 Series
Sample ID Number: QC20160608
Test Date: 8-Jun-16
Test Run Number: 1

	Dilution Tunnel		
	Delta P In. H2O	Temp,°F	Square Root
A1	0.115	76.9	0.0000
A2	0.141	76.8	0.0000
A3	0.138	76.5	0.0000
A4	0.085	77.5	0.0000
A Center	0.136	77.3	0.0000
B1	0.120	76.9	0.0000
B2	0.136	76.9	0.0000
B3	0.130	76.8	0.0000
B4	0.119	77.0	0.0000
B Center	0.140	78.8	0.0000
Averages	#DIV/0!	#DIV/0!	0.0000

Tunnel Diameter **8.000** inches

Tunnel Static 0.209 in. H2O

Tunnel Area 0.34907 Ft2

Pitot Correction #DIV/0! factor

Baro. Pressure 29.40

Pitot Factor **0.84** (0.99 for standard, 0.84 or Cal. For S-Type)

Initial Velocity #DIV/0! Ft/ Sec

Initial Flow **#DIV/0!** Ft3/min

Test Engineer: C. Pellad

Date: 8-JUN-2016

Date/heure	Time	O_2	CO	CO_2IR	CO	
YYYY-MM-DD HH:MM:SS	min	%	ppm	%	%	
2016-06-08 10:03:00	0	20.79	*25*	1.20	0.00	
2016-06-08 10:13:00	10	16.14	*604*	2.66	0.06	
2016-06-08 10:23:00	20	15.51	*1409*	4.85	0.14	
2016-06-08 10:33:00	30	12.20	*669*	7.29	0.07	
2016-06-08 10:43:00	40	11.82	*893*	8.59	0.09	
2016-06-08 10:53:00	50	10.55	*180*	10.94	0.02	
2016-06-08 11:03:00	60	12.61	*215*	8.66	0.02	
2016-06-08 11:13:00	70	12.44	*2081*	6.42	0.21	<--Main fuel load added.
2016-06-08 11:23:00	80	5.96	*22355*	12.61	2.24	
2016-06-08 11:33:00	90	5.31	*14906*	15.54	1.49	
2016-06-08 11:43:00	100	6.39	*7470*	15.16	0.75	
2016-06-08 11:53:00	110	6.44	*5870*	14.94	0.59	
2016-06-08 12:03:00	120	7.42	*2093*	14.33	0.21	
2016-06-08 12:13:00	130	7.57	*1592*	13.84	0.16	
2016-06-08 12:23:00	140	9.22	*218*	12.27	0.02	
2016-06-08 12:33:00	150	9.73	*175*	11.48	0.02	
2016-06-08 12:43:00	160	11.10	*119*	10.04	0.01	
2016-06-08 12:53:00	170	12.08	*78*	9.06	0.01	
2016-06-08 13:03:00	180	13.03	*184*	8.16	0.02	
2016-06-08 13:13:00	190	13.62	*343*	7.56	0.03	
2016-06-08 13:23:00	200	14.60	*483*	6.54	0.05	
2016-06-08 13:33:00	210	15.40	*1397*	5.55	0.14	
2016-06-08 13:43:00	220	15.47	*2686*	5.38	0.27	
2016-06-08 13:53:00	230	16.39	*3287*	4.63	0.33	
2016-06-08 14:03:00	240	16.63	*3382*	4.22	0.34	
2016-06-08 14:13:00	250	16.69	*3476*	4.10	0.35	
2016-06-08 14:23:00	260	17.27	*2546*	3.69	0.25	
2016-06-08 14:33:00	270	17.62	*2173*	3.34	0.22	
2016-06-08 14:43:00	280	17.64	*2059*	3.18	0.21	
2016-06-08 14:53:00	290	17.68	*1963*	3.22	0.20	
2016-06-08 15:03:00	300	17.80	*2012*	3.08	0.20	
2016-06-08 15:13:00	310	17.95	*1989*	2.95	0.20	
2016-06-08 15:23:00	320	18.22	*1678*	2.71	0.17	

Time	Ambient	Flue	Dilution Tunnel	Firebox Top	Firebox Right	Firebox Back	Firebox Bottom	Firebox Left
min	°F	°F	°F	°F	°F	°F	°F	°F
0	77.39	77.66	77.86	77.86	76.68	77.09	77.07	76.16
10	78.05	231.10	103.66	180.76	85.25	80.83	80.74	77.83
20	78.49	452.73	111.76	396.39	109.26	99.95	100.42	99.02
30	79.26	515.08	120.81	463.39	147.67	135.37	139.86	172.31
40	79.93	525.27	128.79	462.75	213.43	179.18	191.82	251.63
50	80.73	663.09	148.22	654.12	285.23	234.14	255.06	314.01
60	82.24	629.94	139.98	621.43	358.46	294.72	329.13	369.53
70	82.43	600.26	200.89	583.62	415.69	338.28	378.05	416.80
80	81.28	739.21	157.99	733.93	458.49	363.16	410.57	445.05
90	82.83	847.53	179.49	854.39	480.45	394.03	457.13	432.42
100	83.88	893.72	182.12	905.46	499.73	450.39	511.89	413.87
110	84.14	888.48	182.41	895.80	517.41	492.84	546.19	405.32
120	85.26	877.37	180.93	929.37	534.09	516.06	570.66	418.00
130	85.63	838.66	174.71	937.68	547.51	530.91	578.63	438.97
140	85.76	807.14	171.62	910.06	560.68	541.91	580.64	459.99
150	85.87	763.36	165.04	843.36	573.23	543.01	580.19	485.37
160	86.02	732.09	159.01	816.03	584.51	538.87	579.20	495.07
170	86.58	685.64	154.97	741.18	595.20	532.52	573.97	502.35
180	85.88	647.90	149.98	678.04	601.35	524.52	565.42	513.92
190	85.00	615.59	144.61	627.82	604.12	514.04	552.93	518.65
200	84.51	585.04	140.40	588.69	603.34	502.58	540.70	523.45
210	83.76	544.56	135.00	540.92	596.99	489.03	524.66	531.74
220	83.33	508.64	130.37	489.74	584.83	472.31	503.00	534.27
230	82.82	484.31	127.26	462.45	568.16	454.18	482.78	534.17
240	83.30	449.06	122.93	423.05	551.49	436.74	463.67	533.94
250	82.53	429.07	120.05	397.14	534.58	421.40	446.51	527.82
260	82.14	414.73	117.84	379.57	518.03	406.67	430.11	523.78
270	81.59	396.08	115.62	358.39	503.67	392.74	415.75	523.06
280	82.04	379.47	114.09	339.33	489.99	378.63	400.20	520.56
290	81.57	368.11	112.65	325.81	477.86	364.97	384.88	520.75
300	81.47	359.21	110.69	314.70	467.44	353.22	371.48	520.84
310	81.42	352.12	109.76	305.38	457.12	342.45	359.38	521.02

320	80.96	342.21	108.57	294.62	447.07	333.41	349.52	517.26

DGM Outlet 1	DGM Inlet 1	Probe 1	DGM Outlet 2	DGM Inlet 2	Probe 2	Probe 3	Draft	Dilution Tunnel
°F	°F	°F	°F	°F	°F	°F	"H_2O	"H_2O
81.03	81.23	89.20	81.15	79.87	84.15	85.87	0.007	0.138
83.84	84.52	81.70	84.21	81.03	83.00	83.67	0.034	0.132
84.21	83.60	81.83	84.13	81.81	81.48	82.43	0.062	0.133
85.89	83.19	83.12	83.37	82.82	82.63	84.26	0.068	0.148
85.80	83.03	85.28	83.20	83.50	84.66	83.75	0.069	0.145
85.30	82.77	82.74	83.10	83.82	82.78	83.34	0.077	0.142
85.82	82.56	82.50	82.94	83.88	82.54	81.99	0.074	0.154
86.44	82.67	82.54	82.64	84.09	82.35	N/A	0.076	0.148
86.99	83.06	83.56	82.86	84.77	83.28	N/A	0.082	0.152
87.26	83.38	84.88	83.18	85.06	84.48	N/A	0.088	0.149
87.33	83.72	85.45	83.31	85.09	85.87	N/A	0.090	0.149
87.36	84.40	85.78	83.69	85.19	86.15	N/A	0.088	0.146
87.33	84.97	85.65	84.20	85.39	86.12	N/A	0.088	0.150
87.82	85.66	85.62	84.70	85.59	85.96	N/A	0.087	0.152
88.08	86.02	85.74	84.87	85.81	85.71	N/A	0.085	0.141
88.34	86.06	85.40	84.67	85.72	85.24	N/A	0.081	0.144
88.61	86.21	85.03	84.78	85.89	84.87	N/A	0.081	0.147
88.71	86.25	84.72	84.92	85.99	84.76	N/A	0.078	0.138
88.70	86.22	84.33	85.04	86.11	84.45	N/A	0.075	0.138
88.77	86.25	84.34	85.13	86.23	84.06	N/A	0.073	0.136
88.85	86.27	83.98	85.35	86.26	83.84	N/A	0.070	0.136
88.86	86.30	83.61	85.48	86.36	83.43	N/A	0.067	0.138
88.81	86.13	83.33	85.46	86.28	83.16	N/A	0.065	0.140
88.86	86.04	83.22	85.48	86.19	82.98	N/A	0.062	0.139
88.73	85.99	82.83	85.21	86.15	82.64	N/A	0.061	0.142
88.62	85.83	82.45	85.08	85.93	82.31	N/A	0.059	0.142
88.26	85.49	84.31	84.93	85.80	83.84	N/A	0.057	0.142
88.00	85.22	85.09	84.89	85.71	84.35	N/A	0.054	0.143
87.88	85.05	85.17	84.88	85.71	84.36	N/A	0.054	0.130
87.79	84.99	85.01	85.10	85.55	84.18	N/A	0.052	0.135
87.70	84.88	84.62	85.10	85.68	83.95	N/A	0.051	0.133
87.32	84.86	84.36	85.04	85.72	83.54	N/A	0.050	0.133

87.26	85.07	84.14	85.05	85.80	83.26	N/A	0.051	0.134

Scale	DGM 1 mean	DGM 2 mean	Scale zeroed
lb	°F	°F	lb
4.39	81.13	86.68	0.00
11.22	84.18	82.35	6.83
9.59	83.91	81.65	5.20
7.73	84.54	82.87	3.34
17.27	84.41	84.97	12.88
13.78	84.03	82.76	9.39
10.83	84.19	82.52	6.45
62.86	84.55	82.45	58.48
43.94	85.02	83.42	39.55
38.24	85.32	84.68	33.85
32.99	85.52	85.66	28.60
28.51	85.88	85.97	24.13
24.34	86.15	85.89	19.95
20.73	86.74	85.79	16.34
17.53	87.05	85.72	13.14
15.03	87.20	85.32	10.64
12.90	87.41	84.95	8.51
11.30	87.48	84.74	6.91
10.00	87.46	84.39	5.61
8.96	87.51	84.20	4.57
8.12	87.56	83.91	3.73
7.51	87.58	83.52	3.12
7.06	87.47	83.25	2.67
6.68	87.45	83.10	2.29
6.34	87.36	82.73	1.95
6.02	87.22	82.38	1.63
5.68	86.88	84.07	1.29
5.41	86.61	84.72	1.02
5.18	86.47	84.77	0.80
4.94	86.39	84.59	0.55
4.70	86.29	84.29	0.31
4.44	86.09	83.95	0.05

4.23	86.17	83.70	-0.16

Manufacturer:	SBI	**Eng:**	Claude Pelland													
Model:	HE350 Series (FP-15)															
Date:	2016-06-08															
Run:	1															
Control #:	QC20160608															
Rated Capacity	-	BTU/HR														
Test Duration:	**320**															
Output Category:	4	Start	End													
Barometer (in.Hg):		29.4	29.4													
Dry Bulb (F):		62	65													
Humidity (%):		71	64													
Average Stove Temperature:		0.00														
Moisture content of wood (wet basis):		17.88														
	Average	0.00	0.00	0.00	564.98	82.67	139.40	#DIV/0!	0.00	0.00	0.00	0.00	0.00	0.00		88.66
*	*	*	*	*	*1	*2	*3	*4							*	*
Elapsed	Weight				Flue	Room	Tunnel	Outlet	door	ash door	left side	back	right side	front	DGM 1	DGM 1
Time	Remaining	CO	CO_2	O_2	Gas	Temp	Dry Bulb	air							Reading	Inlet T
0	4.39	0.00	0.00	0.00	77.66	77.39	77.86		0.00	0.00	0.00	0.00	0.00	0.00	921.072	81.23
10	6.83	0.00	0.00	0.00	231.10	78.05	103.66		0.00	0.00	0.00	0.00	0.00	0.00	921.952	88.52
20	5.20	0.00	0.00	0.00	452.73	78.49	111.76		0.00	0.00	0.00	0.00	0.00	0.00	922.900	87.60
30	3.34	0.00	0.00	0.00	515.08	79.26	120.81		0.00	0.00	0.00	0.00	0.00	0.00	923.860	87.19
40	12.88	0.00	0.00	0.00	525.27	79.93	128.79		0.00	0.00	0.00	0.00	0.00	0.00	924.829	87.03
50	9.39	0.00	0.00	0.00	663.09	80.73	148.22		0.00	0.00	0.00	0.00	0.00	0.00	925.803	86.77
60	6.45	0.00	0.00	0.00	629.94	82.24	139.98		0.00	0.00	0.00	0.00	0.00	0.00	926.773	86.56
70	58.48	0.00	0.00	0.00	600.26	82.43	200.89		0.00	0.00	0.00	0.00	0.00	0.00	927.738	86.67
80	39.55	0.00	0.00	0.00	739.21	81.28	157.99		0.00	0.00	0.00	0.00	0.00	0.00	928.703	87.06
90	33.85	0.00	0.00	0.00	847.53	82.83	179.49		0.00	0.00	0.00	0.00	0.00	0.00	929.677	87.38
100	28.60	0.00	0.00	0.00	893.72	83.88	182.12		0.00	0.00	0.00	0.00	0.00	0.00	930.628	87.72
110	24.13	0.00	0.00	0.00	888.48	84.14	182.41		0.00	0.00	0.00	0.00	0.00	0.00	931.558	88.40
120	19.95	0.00	0.00	0.00	877.37	85.26	180.93		0.00	0.00	0.00	0.00	0.00	0.00	932.456	88.97
130	16.34	0.00	0.00	0.00	838.66	85.63	174.71		0.00	0.00	0.00	0.00	0.00	0.00	933.366	89.66
140	13.14	0.00	0.00	0.00	807.14	85.76	171.62		0.00	0.00	0.00	0.00	0.00	0.00	934.275	90.02
150	10.64	0.00	0.00	0.00	763.36	85.87	165.04		0.00	0.00	0.00	0.00	0.00	0.00	935.194	90.06
160	8.51	0.00	0.00	0.00	732.09	86.02	159.01		0.00	0.00	0.00	0.00	0.00	0.00	936.116	90.21
170	6.91	0.00	0.00	0.00	685.64	86.58	154.97		0.00	0.00	0.00	0.00	0.00	0.00	937.039	90.25
180	5.61	0.00	0.00	0.00	647.90	85.88	149.98		0.00	0.00	0.00	0.00	0.00	0.00	937.952	90.22
190	4.57	0.00	0.00	0.00	615.59	85.00	144.61		0.00	0.00	0.00	0.00	0.00	0.00	938.885	90.25
200	3.73	0.00	0.00	0.00	585.04	84.51	140.40		0.00	0.00	0.00	0.00	0.00	0.00	939.805	90.27
210	3.12	0.00	0.00	0.00	544.56	83.76	135.00		0.00	0.00	0.00	0.00	0.00	0.00	940.725	90.30
220	2.67	0.00	0.00	0.00	508.64	83.33	130.37		0.00	0.00	0.00	0.00	0.00	0.00	941.651	90.13
230	2.29	0.00	0.00	0.00	484.31	82.82	127.26		0.00	0.00	0.00	0.00	0.00	0.00	942.573	90.04
240	1.95	0.00	0.00	0.00	449.06	83.30	122.93		0.00	0.00	0.00	0.00	0.00	0.00	943.488	89.99
250	1.63	0.00	0.00	0.00	429.07	82.53	120.05		0.00	0.00	0.00	0.00	0.00	0.00	944.412	89.83
260	1.29	0.00	0.00	0.00	414.73	82.14	117.84		0.00	0.00	0.00	0.00	0.00	0.00	945.334	89.49
270	1.02	0.00	0.00	0.00	396.08	81.59	115.62		0.00	0.00	0.00	0.00	0.00	0.00	946.240	89.22
280	0.80	0.00	0.00	0.00	379.47	82.04	114.09		0.00	0.00	0.00	0.00	0.00	0.00	947.164	89.05
290	0.55	0.00	0.00	0.00	368.11	81.57	112.65		0.00	0.00	0.00	0.00	0.00	0.00	948.081	88.99
300	0.31	0.00	0.00	0.00	359.21	81.47	110.69		0.00	0.00	0.00	0.00	0.00	0.00	949.005	88.88
310	0.05	0.00	0.00	0.00	352.12	81.42	109.76		0.00	0.00	0.00	0.00	0.00	0.00	949.924	88.86
320	-0.16	0.00	0.00	0.00	342.21	80.96	108.57		0.00	0.00	0.00	0.00	0.00	0.00	950.848	89.07

															Manufacturer:		SBI											
															Model:		HE350 Series (FP-15)											Stack are
															Date:		6-8-16											Wood moisture (%
															Run:		1											Load Weight (lbs w
															Project #:		QC20160608											Burn Rate (Dry kg/
																	-											Burn time of high fire
															Test Duration:		320											
															Total Gas Volume (DGM 1):		28.244											Final Temperature (D
															Total Gas Volume (DGM 2):		28.416											Final Temperature (D
															Average Barometric Pressure:		29.4											Final Tunnel Tempe
															Molecular Weight:		28.78											Final Tunnel Velocit
															Pitot Correction:		0.9525288											Standardized T
															Calibration Factor (DGM #1):		1.0060											
															Calibration Factor (DGM #2):		1.0030											
																(1) VS:	0.0767454											
90.90	84.34		84.82	84.14	84.27	0.1414	0.07									(2) VS:	0.0762803					Filter	Filter					
*	*	*	*	*	*	*	*															Face	Face	Delta-P	Tunnel			
DGM 1	Filter 1	DGM 2	DGM 2	DGM 2	Filter 2	Tunnel			Elapsed	DGM 1	DGM 1	DGM 1	DGM 2	DGM 2	DGM 2	Tunnel	Velocity	Velocity	(in. H2O)	Velocity							
Outlet T	Temp	Reading	Inlet T	Outlet T	Temp	Velocity	Draft		Time	Reading	Inlet T	Outlet T	Reading	Inlet T	Outlet T	Dry Bulb	DGM 1	DGM 2	Tunnel	Ft/Sec							
81.03	89.20	1083.788	79.87	81.15	84.15	0.138	0.000		0.00	921.07	81.23	81.03	1083.79	79.87	81.15	77.8575			0.138	20.231							
83.84	81.70	1084.692	81.03	84.21	83.00	0.132	0.034		10.00	921.95	88.52	83.84	1084.69	81.03	84.21	103.662	4.50	4.63	0.132	20.284							
86.21	81.83	1085.651	81.81	84.13	81.48	0.133	0.062		20.00	922.90	87.60	86.21	1085.65	81.81	84.13	111.755	4.84	4.91	0.133	20.509							
87.89	83.12	1086.618	82.82	83.37	82.63	0.148	0.068		30.00	923.86	87.19	87.89	1086.62	82.82	83.37	120.805	4.89	4.95	0.148	21.823							
88.80	85.28	1087.573	83.50	83.20	84.66	0.145	0.069		40.00	924.83	87.03	88.80	1087.57	83.50	83.20	128.791	4.93	4.89	0.145	21.762							
89.30	82.74	1088.540	83.82	83.10	82.78	0.142	0.077		50.00	925.80	86.77	89.30	1088.54	83.82	83.10	148.216	4.96	4.95	0.142	21.824							
89.82	82.50	1089.516	83.88	82.94	82.54	0.154	0.074		60.00	926.77	86.56	89.82	1089.52	83.88	82.94	139.98	4.94	5.00	0.154	22.614							
90.44	82.54	1090.495	84.09	82.64	82.35	0.148	0.076		70.00	927.74	86.67	90.44	1090.50	84.09	82.64	200.886	4.91	5.01	0.148	23.293							
90.99	83.56	1091.475	84.77	82.86	83.28	0.152	0.082		80.00	928.70	87.06	90.99	1091.48	84.77	82.86	157.99	4.90	5.01	0.152	22.788							
91.26	84.88	1092.423	85.06	83.18	84.48	0.149	0.088		90.00	929.68	87.38	91.26	1092.42	85.06	83.18	179.485	4.95	4.85	0.149	22.931							
91.33	85.45	1093.361	85.09	83.31	85.87	0.149	0.090		100.00	930.63	87.72	91.33	1093.36	85.09	83.31	182.121	4.83	4.79	0.149	23.006							
91.36	85.78	1094.280	85.19	83.69	86.15	0.146	0.088		110.00	931.56	88.40	91.36	1094.28	85.19	83.69	182.408	4.72	4.70	0.146	22.765							
91.33	85.65	1095.164	85.39	84.20	86.12	0.150	0.088		120.00	932.46	88.97	91.33	1095.16	85.39	84.20	180.926	4.55	4.51	0.150	23.069							
91.82	85.62	1096.068	85.59	84.70	85.96	0.152	0.087		130.00	933.37	89.66	91.82	1096.07	85.59	84.70	174.708	4.61	4.61	0.152	23.096							
92.08	85.74	1096.975	85.81	84.87	85.71	0.141	0.085		140.00	934.28	90.02	92.08	1096.98	85.81	84.87	171.624	4.60	4.63	0.141	22.220							
92.34	85.40	1097.886	85.72	84.67	85.24	0.144	0.081		150.00	935.19	90.06	92.34	1097.89	85.72	84.67	165.044	4.65	4.65	0.144	22.310							
92.61	85.03	1098.796	85.89	84.78	84.87	0.147	0.081		160.00	936.12	90.21	92.61	1098.80	85.89	84.78	159.01	4.67	4.64	0.147	22.456							
92.71	84.72	1099.721	85.99	84.92	84.76	0.138	0.078		170.00	937.04	90.25	92.71	1099.72	85.99	84.92	154.967	4.67	4.72	0.138	21.644							
92.70	84.33	1100.631	86.11	85.04	84.45	0.138	0.075		180.00	937.95	90.22	92.70	1100.63	86.11	85.04	149.982	4.62	4.64	0.138	21.564							
92.77	84.34	1101.548	86.23	85.13	84.06	0.136	0.073		190.00	938.89	90.25	92.77	1101.55	86.23	85.13	144.61	4.72	4.67	0.136	21.364							
92.85	83.98	1102.469	86.26	85.35	83.84	0.136	0.070		200.00	939.81	90.27	92.85	1102.47	86.26	85.35	140.402	4.65	4.69	0.136	21.245							
92.86	83.61	1103.392	86.36	85.48	83.43	0.138	0.067		210.00	940.73	90.30	92.86	1103.39	86.36	85.48	135.003	4.65	4.70	0.138	21.281							
92.81	83.33	1104.312	86.28	85.46	83.16	0.140	0.065		220.00	941.65	90.13	92.81	1104.31	86.28	85.46	130.373	4.68	4.69	0.140	21.420							
92.86	83.22	1105.235	86.19	85.48	82.98	0.139	0.062		230.00	942.57	90.04	92.86	1105.24	86.19	85.48	127.261	4.66	4.70	0.139	21.262							
92.73	82.83	1106.162	86.15	85.21	82.64	0.142	0.061		240.00	943.49	89.99	92.73	1106.16	86.15	85.21	122.927	4.63	4.73	0.142	21.411							
92.62	82.45	1107.083	85.93	85.08	82.31	0.142	0.059		250.00	944.41	89.83	92.62	1107.08	85.93	85.08	120.046	4.68	4.70	0.142	21.335							
92.26	84.31	1108.008	85.80	84.93	83.84	0.142	0.057		260.00	945.33	89.49	92.26	1108.01	85.80	84.93	117.839	4.67	4.72	0.142	21.279							
92.00	84.89	1108.940	85.09	84.35	85.71	0.143	0.054		270.00	946.24	89.22	92.00	1108.94	85.09	84.35	115.619	4.59	4.76	0.143	21.317							
91.88	84.88	1109.860	85.17	84.36	85.71	0.130	0.054		280.00	947.16	89.05	91.88	1109.86	85.17	84.36	114.094	4.68	4.70	0.130	20.351							
91.79	85.10	1110.784	85.01	84.18	85.55	0.135	0.052		290.00	948.08	88.99	91.79	1110.78	85.01	84.18	112.65	4.65	4.72	0.135	20.646							
91.70	85.10	1111.720	84.62	83.95	85.68	0.133	0.051		300.00	949.01	88.88	91.70	1111.72	84.62	83.95	110.688	4.68	4.78	0.133	20.493							
91.32	85.04	1112.639	84.36	83.54	85.72	0.133	0.050		310.00	949.92	88.86	91.32	1112.64	84.36	83.54	109.756	4.66	4.70	0.133	20.450							
91.26	85.05	1113.538	84.14	83.26	85.80	0.134	0.051		320.00	950.85	89.07	91.26	1113.54	84.14	83.26	108.572	4.69	4.60	0.134	20.542							

			(ASTM E2515 Formula)						
a (ft2):	0.3490659		Manufacturer:		SBI				
wet):	17.88		Model:		HE350 Series (FP-15)				
et):	43.22		Date:		6-8-16				
hr):	3.864		Run:		1				
load (min):	250.000								
DGM #1) Degrees Rankin:			549.779						
DGM #2) Degrees Rankin:			544.481						
erature Degrees Rankin:			599.396						
y (feet per second):			21.654						
unnel Flow (dscfm):			384.5533289						
Average	Average								
Inlet +	Inlet +								
Outlet	Outlet	Average	Average	#1	#2		Average		
Temp.	Temp.	**100.0**	**100.0**	dDGM	dDGM		**0.38**		
Meter 1	Meter 2	**Proportional Rates**		Vol.Std.	Vol.Std.		SQRT		
Deg. R	Deg. R	**PR1**	**PR2**	(ft3)	(ft3)	Time	Delta-P		
541.1	540.5					0	0.370874		
546.2	542.6	96.16	98.25	0.841	0.867	10	0.363223		
546.9	543.0	103.65	104.43	0.904	0.919	20	0.364644		
547.5	543.1	99.97	100.48	0.915	0.926	30	0.384975		
547.9	543.3	102.44	100.78	0.923	0.914	40	0.381289		
548.0	543.5	106.02	105.08	0.927	0.926	50	0.376215		
548.2	543.4	100.46	100.98	0.923	0.934	60	0.392495		
548.6	543.4	106.73	108.34	0.918	0.937	70	0.385213		
549.0	543.8	101.84	103.49	0.917	0.937	80	0.389713		
549.3	544.1	105.59	102.83	0.925	0.906	90	0.385508		
549.5	544.2	103.11	101.80	0.903	0.897	100	0.385989		
549.9	544.4	101.81	100.75	0.882	0.878	110	0.381851		
550.2	544.8	96.70	95.29	0.852	0.844	120	0.387392		
550.7	545.1	96.72	96.26	0.862	0.863	130	0.389746		
551.0	545.3	99.82	99.83	0.861	0.865	140	0.375871		
551.2	545.2	99.41	98.88	0.870	0.869	150	0.379387		
551.4	545.3	98.05	97.13	0.872	0.868	160	0.383728		
551.5	545.5	101.15	101.72	0.873	0.882	170	0.371058		
551.5	545.6	99.62	99.59	0.864	0.868	180	0.371189		
551.5	545.7	101.83	100.36	0.883	0.874	190	0.36939		
551.6	545.8	100.25	100.61	0.870	0.878	200	0.368605		
551.6	545.9	99.18	99.71	0.870	0.879	210	0.370906		
551.5	545.9	98.44	97.99	0.876	0.877	220	0.374798		
551.5	545.8	98.23	98.53	0.872	0.880	230	0.373011		
551.4	545.7	96.12	97.60	0.866	0.884	240	0.377025		
551.2	545.5	96.98	96.90	0.875	0.878	250	0.37662		
550.9	545.4	96.78	97.25	0.873	0.882	260	0.376346		
550.6	544.7	94.66	97.67	0.858	0.890	270	0.377739		
550.5	544.8	100.91	100.71	0.876	0.878	280	0.361092		
550.4	544.6	98.49	99.51	0.869	0.883	290	0.366787		
550.3	544.3	99.68	101.32	0.876	0.895	300	0.364695		
550.1	544.0	99.26	99.65	0.872	0.879	310	0.364229		
550.2	543.7	99.11	96.93	0.876	0.860	320	0.366258		

Intertek Testing Services

Manufacturer:	**SBI**
Model:	**HE350 Series (FP-15)**
Date:	**6-8-16**
Run:	**1**
Project #:	**QC20160608**
Test Duration: (minutes)	**320**

RESULTS

Average emission rate:(gr/hr)	**2.891**
Burn Rate (Dry kg/hr):	3.864

PRESSURE FACTOR	0.98262
TEMPERATURE FACTORS	
DGM #1:	0.96039
DGM #2:	0.96973
VOLUMES SAMPLED	
DGM #1:	28.26803
DGM #2:	28.43313
TOTAL TUNNEL VOLUME (scf):	123057
SAMPLE RATIOS	
Sample Train 1:	4353.224
Sample Train 2:	4327.946
TOTAL EMISSIONS	
Sample Train 1 (g):	**18.28**
Sample Train 2 (g):	**12.55**
EMISSION RATES	
Sample Train 1 (g/hr):	**3.43**
Sample Train 2 (g/hr):	**2.35**
MAX Allowed	7.50%
DEVIATION:	18.59%

BAROMETRIC PRESSURE	
Average:	29.4
Start:	29.4
End:	29.4
DRY GAS METER VALUES	
DGM #1 Final:	950.848
Initial:	921.072
DGM #2 Final:	1113.538
Initial:	1083.788
TEMPERATURES (DEG. RANKIN)	
DGM #1:	549.779
DGM #2:	544.481
CALIBRATION FACTORS	
DGM #1:	1.0060
DGM #2:	1.0030
TUNNEL FLOW RATE:	384.553
PARTICULATE CATCH (mg)	
Total Sample Train 1:	4.2
Total Sample Train 2:	2.9
Filter and seal Sample Train 1:	3
Filter and seal Sample Train 2:	2.9
Probe Sample Train 1:	1.2
Probe Sample Train 2:	0

Manufacturer:	SBI	**Eng:**	Claude Pelland																					
Model:	HE350 Series (FP-15)																							
Date:	2016-06-08																							
Run:	1																							
Control #:	QC20160608																							
Rated Capacity	-	BTU/HR																						
Test Duration:	**60**																							
Output Category:	4	Start	End																					
	Barometer (in.Hg):	29.4	29.4																					
	Dry Bulb (F):	62	65																					
	Humidity (%):	71	64																					
Average Stove Temperature:		0.00																						
Moisture content of wood (wet basis):		17.84																						
	Average	0.00	0.00	0.00	442.12	79.44	118.72	#DIV/0!	0.00	0.00	0.00	0.00	0.00	0.00		86.41	86.70	83.62					0.1417	0.05
*	*	*	*	*	*1	*2	*3	*4							*	*	*	*					*	*
Elapsed	Weight				Flue	Room	Tunnel	Outlet	door	ash door	left side	back	right side	front	DGM 3	DGM 3	DGM 3	Filter 3					Tunnel	
Time	Remaining	CO	CO_2	O_2	Gas	Temp	Dry Bulb	air							Reading	Inlet T	Outlet T	Temp					Velocity	Draft
0.00	4.39	0.00	0.00	0.00	77.66	77.39	77.86		0.00	0.00	0.00	0.00	0.00	0.00	540.123	81.23	81.03	85.87					0.138	0.000
10.00	6.83	0.00	0.00	0.00	231.10	78.05	103.66		0.00	0.00	0.00	0.00	0.00	0.00	541.660	88.52	83.84	83.67					0.132	0.034
20.00	5.20	0.00	0.00	0.00	452.73	78.49	111.76		0.00	0.00	0.00	0.00	0.00	0.00	543.175	87.60	86.21	82.43					0.133	0.062
30.00	3.34	0.00	0.00	0.00	515.08	79.26	120.81		0.00	0.00	0.00	0.00	0.00	0.00	544.630	87.19	87.89	84.26					0.148	0.068
40.00	12.88	0.00	0.00	0.00	525.27	79.93	128.79		0.00	0.00	0.00	0.00	0.00	0.00	546.160	87.03	88.80	83.75					0.145	0.069
50.00	9.39	0.00	0.00	0.00	663.09	80.73	148.22		0.00	0.00	0.00	0.00	0.00	0.00	547.490	86.77	89.30	83.34					0.142	0.077
60.00	6.45	0.00	0.00	0.00	629.94	82.24	139.98		0.00	0.00	0.00	0.00	0.00	0.00	548.904	86.56	89.82	81.99					0.154	0.074

																(ASTM E2515 Formula)						
			Manufacturer:		SBI																	
			Model:		HE350 Series (FP-15)							Stack area (ft2):	0.349066		Manufacturer:		SBI					
			Date:		6-8-16							Wood moisture (% wet):	17.84		Model:		HE350 Series (FP-15)					
			Run:		1							Load Weight (lbs wet):	62.88		Date:		6-8-16					
			Project #:		QC20160608							Burn Rate (Dry kg/hr):	23.434		Run:		1					
					-																	
			Test Duration:		60																	
			Total Gas Volume (DGM 1):		8.211							Final Temperature (DGM #3) Degrees Rankin:			546.556							
			Total Gas Volume (DGM 2):		0.000																	
			Average Barometric Pressure:		29.4							Final Tunnel Temperature Degrees Rankin:			578.724							
			Molecular Weight:		28.78							Final Tunnel Velocity (feet per second):			21.292							
			Pitot Correction:		0.952529							Standardized Tunnel Flow (dscfm):			391.637197							
			Calibration Factor (DGM #3):		0.9870																	
														Average								
				(3) VS:	0.268863									Inlet +								
								Filter						Outlet		Average		#3				Average
								Face		Delta-P	Tunnel			Temp.		**100.1**		dDGM				**0.38**
Elapsed	DGM 3	DGM 3	DGM 3				Tunnel	Velocity		(in. H2O)	Velocity			Meter 3		**Proportional Rates**		Vol.Std.				SQRT
Time	Reading	Inlet T	Outlet T				Dry Bulb	DGM 3		Tunnel	Ft/Sec			Deg. R		**PR3**		(ft3)			Time	Delta-P
0.00	540.12	81.23	81.03				77.857			0.138	20.231			541.1							0	0.370874
10.00	541.66	88.52	83.84				103.66	7.70		0.132	20.284			546.2		107.48		1.440			10	0.363223
20.00	543.18	87.60	86.21				111.76	7.58		0.133	20.509			546.9		106.00		1.418			20	0.364644
30.00	544.63	87.19	87.89				120.81	7.27		0.148	21.823			547.5		96.96		1.360			30	0.384975
40.00	546.16	87.03	88.80				128.79	7.64		0.145	21.762			547.9		103.51		1.429			40	0.381289
50.00	547.49	86.77	89.30				148.22	6.64		0.142	21.824			548.0		92.64		1.242			50	0.376215
60.00	548.90	86.56	89.82				139.98	7.06		0.154	22.614			548.2		93.72		1.320			60	0.392495

Intertek Testing Services

Manufacturer:	**SBI**
Model:	**HE350 Series (FP-15)**
Date:	**6-8-16**
Run:	**1**
Project #:	**QC20160608**
Test Duration: (minutes)	**60**

RESULTS

Average emission rate:(gr/hr) 3.4

Burn Rate (Dry kg/hr): N/A

PRESSURE FACTOR 0.98262

TEMPERATURE FACTORS

DGM #3: 0.96605

VOLUMES SAMPLED

DGM #3: 8.22709

TOTAL TUNNEL VOLUME (scf): 23498

SAMPLE RATIOS

Sample Train 3: 2856.201

TOTAL EMISSIONS

Sample Train 3 (g): **3.43**

EMISSION RATES

Sample Train 3 (g/hr): **3.43**

MAX Allowed N/A

DEVIATION: N/A

		Train 3
	Cs	0.00014586
	Cr	0
	Et	3.43
	Et	AVERAGE

BAROMETRIC PRESSURE

Average:	29.4
Start:	29.4
End:	29.4

DRY GAS METER VALUES

DGM #3	Final:	548.904
	Initial:	540.123

TEMPERATURES (DEG. RANKIN)

DGM #3: 546.556

CALIBRATION FACTORS

DGM #3: 0.9870

TUNNEL FLOW RATE: 391.637

PARTICULATE CATCH (mg)

Total Sample Train 3: 1.2

Filter and seal Sample Train 3: 1.2

Probe Sample Train 3: 0

Room Particulate Correction

Mr	0	Milligram Catch (mg)
Vmr	7.7544	Total Volume Sampled (dscf)

Rotometer (glass) at 100 flow rate is 0.12924 cfm

Grams Emissions

For Usable Firebox Volumes above 3.0 ft^3 - Low and Medium Fire						
Nominal Required Load Density (wet basis)	12	lb/ft^3				
Usable Firebox Volume	4.28	ft^3				
Total Nom. Load Wt. Target	51.312	lb				
Total Load Wt. Allowable Range	48.75	to	53.88	lb		
Core Target Wt. Allowable Range	23.09	to	33.35	lb		
Remainder Load Wt. Allowable Range	17.96	to	28.22	lb		
						Mid-Point
Core Load Fuel Pc. Wt. Allowable Range	7.70	to	12.83	lb		10.26
Remainder Load Pc. Wt. Allowable Range	5.13	to	10.26	lb		7.70
	Pc. #					
Core Load Piece Wt. Actual	1	8.23	lb		In Range	
	2	8.55	lb		In Range	
	3	7.82	lb		In Range	
Core Load Total. Wt. Actual		24.61	lb		In Range	
	Pc. #					
Remainder Load Piece Wt.	1	5.55	lb		In Range	
(3 or 4 Pcs.)	2	5.71	lb		In Range	
	3	8.86	lb		In Range	
	4	7.11	lb		In Range	
Remainder Load Piece Weight Ratio - Small/Large		63%			In Range	≤ 67%
Remainder Load Tot. Wt. Act		27.23	lb		In Range	
Total Load Wt. Actual		51.83	lb		In Range	
Core % of Total Wt.		47%			In Range	45-65%
Remainder % of Total Wt.		53%			In Range	35-55%
Actual Load % of Nominal Target		101%			In Range	95-105%
Actual Fuel Load Density		12.1	lb/ft^3			
Allowable Charcoal Bed Wt. Range (lb)	5.2	to	10.3			Mid-Point
Actual Charcoal Bed Wt.		6.56	lb		In Range	7.8
Actual Fuel Load Ending Wt.		0.0	lb		Valid Test	≥ 90%
Total Wt. of Fuel Burned During Test Run lb.		51.8	lb			

Fuel Piece Moisture Reading (%-dry basis)								
1	2	3	Ave.		Pc. Wt. Dry Basis			
22.1	26.4	23.8	24.1	In Range	6.63	lb	3.01	kg
22.3	33.5	26.3	27.4	In Range	6.71	lb	3.04	kg
21.3	16	19.1	18.8	In Range	6.58	lb	2.99	kg
22.8	18.4	24.2	21.8	In Range	4.56	lb	2.07	kg
21.5	21.4	24.2	22.4	In Range	4.66	lb	2.12	kg
24.5	20.7	24.3	23.2	In Range	7.19	lb	3.26	kg
24.6	24.6	21.9	23.7	In Range	5.75	lb	2.61	kg
Total Load Ave. MC % (dry basis)			23.1	In Range				
Total Load Ave. MC % (wet basis)			18.8					
Total Test Load Weight (dry basis) →					42.09	lb	16.48	kg
Total Fuel Weight Burned During Test Run (dry basis)					42.1	lb	19.09	kg

Intertek

TEST FUEL DATA
EPA METHOD 5G-3

Project Number:	G102163747
Manufacturer:	SBI
Model:	HE350 Series
Sample ID Number:	QC20160608
Test Date:	~~10~~ 9-Jun-16
Test Run Number:	3

Calibration Reference ID	SBI-153	
Set meter to Species 1	12%	12
Set Temperature to 70F	22%	22
Set pin setting to 444		

PRE-BURN FUEL PROPERTIES

Eq. ID No.:		Time:	07:55	Temp., °F:	76.7
Piece No.	Length, In.	Weight, Lb.	Moisture, %, Dry Basis		
1					
2					
3					
4					
5					
6					
7					
8					
9					
10					
11					
12					
Total Weight		0.0	Average, %db		#DIV/0!

Allowable Fuel Load Range: **27** to **32.9**

TEST FUEL LOAD PROPERTIES

Eq. ID No.:	SBI-229		Time:	07:55	Temp., °F:	76.7
Piece No.	Length, In.	Weight, Lb. 2x4	Weight, Lb. 4x4	Moisture, %, Dry Basis		
1	16.5	7.110	-	24.6	24.6	21.9
2	16 3/4	8.551	-	22.3	33.5	26.3
3	16 1/2	8.233	-	22.1	26.4	23.8
4	15 1/2	8.858	-	24.5	20.7	24.3
5	17	7.821	-	21.3	16.0	19.1
6	16 1/4	5.554	-	22.8	18.4	24.2
7	16 1/4	5.707	-	21.5	21.4	24.2
8	-	-	-	-	-	-
Totals		0.0	0.0			
% of Weight		#DIV/0!	#DIV/0!			
Total weight, wet, lb.		0.00		Average Moisture, dry		#DIV/0!
Total weight, dry, kg		#DIV/0!		Average Moisture, wet		#DIV/0!

Test Engineer: _____

Date: 9-June 2016

Intertek

TEST FUEL DATA
EPA METHOD 5G-3

Project Number:	G102163747
Manufacturer:	SBI
Model:	HE350 Series
Sample ID Number:	QC20160608
Test Date:	9-Jun-16
Test Run Number:	2

Calibration Reference ID	SBI-153	
Set meter to Species 1		
Set Temperature to 70F	12%	12.0
Set pin setting to 444	22%	22.0

PRE-BURN FUEL PROPERTIES

Eq. ID No.:		Time:	5:15	Temp.,°F:	76.6
Piece No.	Length, In.	Weight, Lb.	Moisture, %, Dry Basis		
1		7.717			
2		12.077	24.3	22.3	20.4
3		12.077	24.3	19.6	18.9
4					
5					
6					
7					
8					
9					
10					
11					
12					
Total Weight		0.0	Average, %db		#DIV/0!

Kidling: START HERE

} 12.077 (4 pieces)

Allowable Fuel Load Range:	27	to	32.9

TEST FUEL LOAD PROPERTIES

Eq. ID No.:	SBI-229		Time:		Temp.,°F:	76.6
Piece No.	Length, In.	Weight, Lb. 2x4	Weight, Lb. 4x4	Moisture, %, Dry Basis		
1	17	8.615	-	23.5	17.6	28.6
2	17	8.827	-	24.0	25.8	24.5
3	16 1/2	7.189	-	26.8	19.2	25.1
4	16 3/4	6.539	-	26.0	21.4	19.0
5	16 3/4	6.359	-	24.9	33.7	16.4
6	17	4.782	-	20.5	18.4	17.8
7						
8						
Totals		0.0	0.0			
% of Weight		#DIV/0!	#DIV/0!			
Total weight, wet, lb.		0.00		Average Moisture, dry		#DIV/0!
Total weight, dry, kg		#DIV/0!		Average Moisture, wet		#DIV/0!

Test Engineer: _____

Date: 9-Jun-2016

Intertek

Dillution Tunnel Velocity Traverse
EPA Method 5G-3

Project Number: G102163747
Manufacturer: SBI
Model: HE350 Series
Sample ID Number: QC20160608
Test Date: 9-Jun-16
Test Run Number: 2

	Dilution Tunnel		
	Delta P In. H2O	Temp,°F	Square Root
A1	0.110	100.4	0.0000
A2	0.127	100.7	0.0000
A3	0.125	100.8	0.0000
A4	0.122	96.6	0.0000
A Center	0.131	101.2	0.0000
B1	0.117	99.7	0.0000
B2	0.132	100.0	0.0000
B3	0.125	99.9	0.0000
B4	0.094	98.3	0.0000
B Center	0.133	99.6	0.0000
Averages	#DIV/0!	#DIV/0!	0.0000

Tunnel Diameter	**8.000**	inches
Tunnel Static	0.198	in. H2O
Tunnel Area	0.34907	Ft2
Pitot Correction	#DIV/0!	factor
Baro. Pressure	29.40	
Pitot Factor	**0.84**	(0.99 for standard, 0.84 or Cal. For S-Type)
Initial Velocity	#DIV/0!	Ft/ Sec
Initial Flow	**#DIV/0!**	Ft3/min

Test Engineer: _____

Date: 9-JUN-2016

Time	Ambiant	Flue	Firebox Top	Dilution Tunnel	Firebox Right	Firebox Back	Firebox Bottom	Firebox Left	DGM Outlet 1
min	°F	°F	°F	°F	°F	°F	°F	°F	°F
0	79.15	501.95	131.31	540.89	607.44	511.72	549.36	527.91	N/A
1	79.35	492.56	123.16	535.24	606.25	509.03	546.31	525.52	N/A
2	78.96	483.76	119.99	531.69	604.76	505.90	543.20	523.49	N/A
3	79.41	474.80	118.12	528.63	603.10	503.23	539.51	521.76	N/A
4	78.92	465.95	116.83	524.80	601.04	500.44	535.57	519.82	N/A
5	78.67	457.76	115.93	520.16	598.94	497.23	531.53	518.05	N/A
6	79.15	450.21	114.81	515.12	596.67	494.02	527.55	516.33	N/A
7	78.59	443.20	114.30	510.20	594.21	491.41	523.47	514.76	N/A
8	78.60	436.20	113.55	504.74	591.60	488.23	519.74	512.15	N/A
9	79.23	428.61	112.64	498.54	588.85	484.64	515.76	510.68	N/A
10	79.16	421.37	112.15	491.59	585.99	481.89	511.87	508.47	N/A
11	79.43	414.70	111.36	484.52	582.99	479.04	508.06	506.85	N/A
12	79.30	408.14	110.99	477.01	579.61	475.47	503.52	504.92	N/A
13	78.06	402.38	110.42	470.85	576.40	472.51	499.71	502.08	N/A
14	78.01	397.26	109.86	464.99	573.15	469.26	495.65	499.65	N/A
15	78.29	392.22	109.12	459.30	569.83	465.80	491.88	497.84	N/A
16	78.37	387.40	108.70	453.57	566.49	462.71	487.94	495.63	N/A
17	78.07	382.56	108.16	448.44	563.13	460.21	484.46	493.57	N/A
18	77.85	378.17	107.69	443.58	559.75	456.93	480.73	490.81	N/A
19	77.88	373.82	107.35	438.84	556.35	453.54	477.22	488.29	N/A
20	77.61	369.84	106.88	434.32	552.94	450.58	473.67	486.66	N/A
21	77.61	365.59	106.38	429.68	549.27	447.13	469.82	484.08	N/A
22	77.33	361.74	105.85	425.51	545.89	444.07	466.34	480.72	N/A
23	77.49	358.71	105.61	421.27	542.51	440.86	463.30	479.28	N/A
24	77.46	355.46	105.15	417.40	539.16	437.95	459.99	477.03	N/A
25	77.25	352.47	104.86	413.66	535.84	434.97	456.86	474.39	N/A
26	77.37	349.44	104.34	410.22	532.56	432.03	454.01	472.53	N/A
27	77.11	346.54	104.12	406.87	529.28	428.90	450.89	469.95	N/A
28	77.35	343.64	103.63	403.48	526.04	426.28	448.09	468.35	N/A
29	77.23	340.76	103.45	400.41	522.87	424.02	445.24	466.19	N/A
30	77.47	337.76	103.12	396.87	519.46	420.95	441.80	463.96	N/A
31	77.00	335.32	102.75	393.71	516.38	418.52	438.94	461.55	N/A

32	77.11	332.71	102.44	390.83	513.35	416.23	435.98	459.40	N/A
33	77.28	330.52	102.31	388.05	510.35	413.71	433.13	457.41	N/A
34	77.09	328.17	101.93	385.25	507.35	411.02	430.45	455.44	N/A
35	77.11	325.76	101.66	382.51	504.47	408.63	428.16	453.46	N/A
36	77.15	323.63	101.54	380.01	501.64	406.01	425.82	451.63	N/A
37	77.19	321.51	100.57	377.44	498.85	403.98	423.46	449.53	N/A
38	77.34	319.76	100.63	375.16	496.11	401.72	420.56	446.94	N/A
39	77.06	317.83	82.84	372.69	493.21	399.40	417.78	444.67	N/A
40	77.06	315.63	99.64	370.46	490.56	397.17	415.81	442.16	N/A
41	77.33	314.02	100.10	368.43	487.94	395.10	413.51	440.40	N/A
42	76.75	312.25	90.36	366.38	485.38	392.41	411.34	438.01	N/A
43	76.97	310.23	88.44	364.45	482.86	390.59	408.97	436.29	N/A
44	77.28	308.84	98.40	362.67	480.38	388.55	406.77	434.93	N/A
45	77.11	303.98	105.22	354.34	478.77	386.42	404.46	433.47	N/A
46	77.52	302.61	101.35	352.92	476.19	384.76	402.61	432.50	N/A
47	77.48	300.71	100.02	351.42	473.65	382.46	400.27	431.25	N/A
48	77.40	298.86	99.28	349.66	470.99	380.49	397.90	429.92	N/A
49	76.94	297.01	98.89	347.87	468.59	378.15	396.09	428.52	N/A
50	76.72	295.30	98.41	346.10	466.19	376.47	394.08	426.60	N/A
51	76.62	293.71	98.20	344.22	463.82	374.29	391.96	425.11	N/A
52	76.85	292.01	97.93	342.30	461.46	372.64	389.87	422.99	N/A
53	76.68	290.35	97.71	340.20	459.13	370.72	387.99	421.35	N/A
54	76.66	288.65	97.49	338.19	456.79	368.62	385.88	419.27	N/A
55	76.48	287.31	97.35	336.38	454.48	366.88	383.91	417.13	N/A
56	76.66	285.96	97.13	334.39	452.17	365.34	381.86	415.08	N/A
57	76.39	283.87	96.93	332.39	449.71	363.26	379.83	412.93	N/A
58	76.44	282.58	96.71	330.51	447.47	361.67	377.65	410.93	N/A
59	76.41	280.92	96.44	328.73	445.22	359.73	375.73	409.13	N/A
60	76.26	279.58	96.32	326.88	443.00	357.54	374.37	407.42	N/A
61	76.52	278.18	96.06	325.18	440.81	355.95	372.69	405.35	N/A
62	76.39	277.09	95.97	323.48	438.65	354.51	371.10	403.62	N/A
63	76.61	275.74	95.75	321.90	436.52	352.72	369.24	401.33	N/A
64	76.58	274.25	95.64	320.13	434.40	350.82	367.49	399.78	N/A
65	76.36	273.36	95.44	318.47	432.33	349.32	365.44	397.88	N/A

66	76.38	271.99	95.36	316.83	430.27	347.90	363.67	396.11	N/A
67	76.41	270.70	95.16	315.07	428.05	346.41	362.17	393.90	N/A
68	76.37	269.62	95.12	313.54	426.03	344.52	360.74	392.24	N/A
69	76.44	268.43	95.01	312.18	424.04	342.61	358.78	390.51	N/A
70	76.24	267.11	94.83	310.72	422.09	341.22	357.07	388.94	N/A
71	76.27	266.22	94.80	309.32	420.16	339.28	355.61	387.10	N/A
72	76.31	265.33	94.60	307.93	418.26	337.58	353.91	385.44	N/A
73	76.33	264.01	94.35	306.66	416.36	336.17	352.30	383.92	N/A
74	76.48	263.16	94.29	305.33	414.50	334.79	350.85	382.56	N/A
75	76.41	262.05	94.15	304.01	412.69	333.29	349.35	380.79	N/A
76	76.63	260.95	94.09	302.62	410.72	331.74	347.89	379.27	N/A
77	76.85	260.03	93.99	301.53	408.95	329.86	346.60	378.20	N/A
78	76.96	259.30	93.88	300.57	407.20	328.68	345.08	376.88	N/A
79	76.88	258.69	93.66	299.38	405.50	327.17	343.38	375.55	N/A
80	77.24	257.65	93.57	298.21	403.81	325.54	341.93	374.34	N/A
81	76.80	257.01	93.59	297.15	402.15	324.66	340.47	372.73	N/A
82	76.80	255.99	93.34	296.08	400.51	323.59	338.88	371.45	N/A
83	76.55	255.01	93.29	295.01	398.91	321.96	337.80	370.22	N/A
84	76.88	254.03	93.09	293.87	397.31	320.61	336.50	369.15	N/A
85	77.03	253.18	93.01	292.72	395.64	319.43	334.99	367.85	N/A
86	77.20	252.40	92.88	291.62	394.09	318.16	333.63	366.55	N/A
87	76.95	251.17	92.83	290.49	392.60	317.02	332.57	365.47	N/A
88	76.53	250.53	92.69	289.31	391.10	315.88	331.45	364.16	N/A
89	76.51	249.80	92.64	288.27	389.63	314.54	330.27	362.30	N/A
90	76.66	248.80	92.54	287.25	388.19	313.36	328.98	361.19	N/A
91	76.50	248.90	92.98	286.26	386.76	312.32	327.63	360.19	N/A
92	76.46	248.15	99.91	279.03	386.20	311.34	326.32	359.37	N/A
93	76.40	247.66	94.94	279.61	384.61	310.47	325.39	359.28	N/A
94	76.37	247.25	93.54	279.96	382.99	308.77	323.98	359.32	N/A
95	76.41	246.41	93.01	280.06	381.61	307.55	323.04	359.14	N/A
96	76.38	246.16	92.67	279.82	380.34	306.51	322.19	358.79	N/A
97	76.49	245.37	92.44	279.41	379.08	305.56	321.03	358.87	N/A
98	76.38	244.94	92.30	278.86	377.88	304.53	319.94	358.08	N/A
99	76.47	244.46	92.11	278.12	376.69	303.42	318.80	357.75	N/A

100	76.49	243.43	91.91	277.27	375.54	302.45	317.87	357.38	N/A
101	76.65	242.59	91.83	276.29	374.40	301.59	316.90	356.88	N/A
102	76.40	241.58	91.76	275.27	373.15	300.67	315.81	356.41	N/A
103	76.60	240.69	91.57	274.08	372.02	299.85	314.73	355.89	N/A
104	76.81	240.22	91.50	272.94	370.95	299.09	313.55	355.12	N/A
105	76.72	239.25	91.45	271.70	369.87	298.10	312.43	354.41	N/A
106	76.79	238.55	91.21	270.54	368.81	297.60	311.68	353.39	N/A
107	76.80	237.60	91.10	269.41	367.75	296.94	310.76	352.53	N/A
108	76.94	236.76	91.11	268.21	366.68	295.79	310.07	351.64	N/A
109	77.01	236.10	91.08	266.98	365.64	294.88	309.07	350.83	N/A
110	76.99	235.17	90.90	265.85	364.60	293.86	307.95	349.63	N/A
111	76.81	234.24	90.82	264.54	363.48	292.88	306.76	348.66	N/A
112	76.80	233.60	90.87	263.33	362.43	292.18	305.68	347.62	N/A

DGM Inlet 1	Probe 1	DGM Outlet 2	DGM Inlet 2	Probe 2	Probe 3	Draft	Dilution Tunnel	Scale
°F	°F	°F	°F	°F	°F	"H2O	"H2O	lb
N/A	N/A	N/A	N/A	N/A	N/A	0.062	0.127	7.98
N/A	N/A	N/A	N/A	N/A	N/A	0.062	0.125	7.97
N/A	N/A	N/A	N/A	N/A	N/A	0.061	0.129	7.93
N/A	N/A	N/A	N/A	N/A	N/A	0.060	0.125	7.93
N/A	N/A	N/A	N/A	N/A	N/A	0.059	0.128	7.90
N/A	N/A	N/A	N/A	N/A	N/A	0.059	0.129	7.88
N/A	N/A	N/A	N/A	N/A	N/A	0.058	0.129	7.85
N/A	N/A	N/A	N/A	N/A	N/A	0.058	0.129	7.83
N/A	N/A	N/A	N/A	N/A	N/A	0.057	0.130	7.82
N/A	N/A	N/A	N/A	N/A	N/A	0.056	0.128	7.81
N/A	N/A	N/A	N/A	N/A	N/A	0.056	0.129	7.78
N/A	N/A	N/A	N/A	N/A	N/A	0.055	0.130	7.76
N/A	N/A	N/A	N/A	N/A	N/A	0.054	0.131	7.75
N/A	N/A	N/A	N/A	N/A	N/A	0.054	0.129	7.73
N/A	N/A	N/A	N/A	N/A	N/A	0.053	0.131	7.74
N/A	N/A	N/A	N/A	N/A	N/A	0.053	0.129	7.72
N/A	N/A	N/A	N/A	N/A	N/A	0.052	0.128	7.72
N/A	N/A	N/A	N/A	N/A	N/A	0.052	0.132	7.71
N/A	N/A	N/A	N/A	N/A	N/A	0.052	0.129	7.70
N/A	N/A	N/A	N/A	N/A	N/A	0.051	0.128	7.69
N/A	N/A	N/A	N/A	N/A	N/A	0.051	0.130	7.67
N/A	N/A	N/A	N/A	N/A	N/A	0.050	0.129	7.67
N/A	N/A	N/A	N/A	N/A	N/A	0.050	0.132	7.65
N/A	N/A	N/A	N/A	N/A	N/A	0.050	0.130	7.64
N/A	N/A	N/A	N/A	N/A	N/A	0.049	0.131	7.62
N/A	N/A	N/A	N/A	N/A	N/A	0.049	0.131	7.60
N/A	N/A	N/A	N/A	N/A	N/A	0.049	0.129	7.59
N/A	N/A	N/A	N/A	N/A	N/A	0.049	0.130	7.58
N/A	N/A	N/A	N/A	N/A	N/A	0.048	0.131	7.56
N/A	N/A	N/A	N/A	N/A	N/A	0.048	0.131	7.54
N/A	N/A	N/A	N/A	N/A	N/A	0.047	0.132	7.53
N/A	N/A	N/A	N/A	N/A	N/A	0.047	0.132	7.51

N/A	N/A	N/A	N/A	N/A	N/A	0.047	0.131	7.50
N/A	N/A	N/A	N/A	N/A	N/A	0.047	0.133	7.49
N/A	N/A	N/A	N/A	N/A	N/A	0.047	0.131	7.47
N/A	N/A	N/A	N/A	N/A	N/A	0.046	0.130	7.47
N/A	N/A	N/A	N/A	N/A	N/A	0.046	0.131	7.44
N/A	N/A	N/A	N/A	N/A	N/A	0.045	0.108	7.43
N/A	N/A	N/A	N/A	N/A	N/A	0.045	0.123	7.42
N/A	N/A	N/A	N/A	N/A	N/A	0.045	0.031	7.40
N/A	N/A	N/A	N/A	N/A	N/A	0.045	0.133	7.39
N/A	N/A	N/A	N/A	N/A	N/A	0.044	0.133	7.37
N/A	N/A	N/A	N/A	N/A	N/A	0.044	0.091	7.36
N/A	N/A	N/A	N/A	N/A	N/A	0.044	0.092	7.35
N/A	N/A	N/A	N/A	N/A	N/A	0.044	0.132	7.34
N/A	N/A	N/A	N/A	N/A	N/A	0.044	0.134	7.30
N/A	N/A	N/A	N/A	N/A	N/A	0.044	0.133	7.30
N/A	N/A	N/A	N/A	N/A	N/A	0.043	0.134	7.29
N/A	N/A	N/A	N/A	N/A	N/A	0.043	0.134	7.28
N/A	N/A	N/A	N/A	N/A	N/A	0.043	0.132	7.28
N/A	N/A	N/A	N/A	N/A	N/A	0.042	0.133	7.29
N/A	N/A	N/A	N/A	N/A	N/A	0.042	0.133	7.29
N/A	N/A	N/A	N/A	N/A	N/A	0.043	0.135	7.29
N/A	N/A	N/A	N/A	N/A	N/A	0.042	0.135	7.28
N/A	N/A	N/A	N/A	N/A	N/A	0.042	0.132	7.27
N/A	N/A	N/A	N/A	N/A	N/A	0.042	0.133	7.26
N/A	N/A	N/A	N/A	N/A	N/A	0.042	0.134	7.26
N/A	N/A	N/A	N/A	N/A	N/A	0.042	0.135	7.25
N/A	N/A	N/A	N/A	N/A	N/A	0.042	0.135	7.24
N/A	N/A	N/A	N/A	N/A	N/A	0.041	0.135	7.23
N/A	N/A	N/A	N/A	N/A	N/A	0.041	0.135	7.21
N/A	N/A	N/A	N/A	N/A	N/A	0.041	0.137	7.21
N/A	N/A	N/A	N/A	N/A	N/A	0.041	0.137	7.19
N/A	N/A	N/A	N/A	N/A	N/A	0.041	0.138	7.17
N/A	N/A	N/A	N/A	N/A	N/A	0.041	0.134	7.15
N/A	N/A	N/A	N/A	N/A	N/A	0.041	0.136	7.15

N/A	N/A	N/A	N/A	N/A	N/A	0.040	0.138	7.15
N/A	N/A	N/A	N/A	N/A	N/A	0.040	0.138	7.12
N/A	N/A	N/A	N/A	N/A	N/A	0.040	0.137	7.11
N/A	N/A	N/A	N/A	N/A	N/A	0.040	0.134	7.10
N/A	N/A	N/A	N/A	N/A	N/A	0.040	0.134	7.10
N/A	N/A	N/A	N/A	N/A	N/A	0.040	0.136	7.08
N/A	N/A	N/A	N/A	N/A	N/A	0.039	0.137	7.07
N/A	N/A	N/A	N/A	N/A	N/A	0.040	0.137	7.05
N/A	N/A	N/A	N/A	N/A	N/A	0.039	0.135	7.04
N/A	N/A	N/A	N/A	N/A	N/A	0.039	0.136	7.02
N/A	N/A	N/A	N/A	N/A	N/A	0.039	0.137	7.01
N/A	N/A	N/A	N/A	N/A	N/A	0.039	0.135	7.02
N/A	N/A	N/A	N/A	N/A	N/A	0.039	0.138	6.98
N/A	N/A	N/A	N/A	N/A	N/A	0.039	0.135	6.98
N/A	N/A	N/A	N/A	N/A	N/A	0.039	0.137	6.95
N/A	N/A	N/A	N/A	N/A	N/A	0.039	0.135	6.94
N/A	N/A	N/A	N/A	N/A	N/A	0.038	0.136	6.92
N/A	N/A	N/A	N/A	N/A	N/A	0.038	0.135	6.92
N/A	N/A	N/A	N/A	N/A	N/A	0.038	0.137	6.90
N/A	N/A	N/A	N/A	N/A	N/A	0.038	0.135	6.88
N/A	N/A	N/A	N/A	N/A	N/A	0.038	0.136	6.88
N/A	N/A	N/A	N/A	N/A	N/A	0.038	0.137	6.85
N/A	N/A	N/A	N/A	N/A	N/A	0.038	0.138	6.84
N/A	N/A	N/A	N/A	N/A	N/A	0.037	0.136	6.84
N/A	N/A	N/A	N/A	N/A	N/A	0.038	0.136	6.83
N/A	N/A	N/A	N/A	N/A	N/A	0.037	0.137	6.85
N/A	N/A	N/A	N/A	N/A	N/A	0.038	0.137	6.81
N/A	N/A	N/A	N/A	N/A	N/A	0.037	0.137	6.79
N/A	N/A	N/A	N/A	N/A	N/A	0.037	0.137	6.77
N/A	N/A	N/A	N/A	N/A	N/A	0.037	0.137	6.75
N/A	N/A	N/A	N/A	N/A	N/A	0.037	0.135	6.75
N/A	N/A	N/A	N/A	N/A	N/A	0.037	0.137	6.73
N/A	N/A	N/A	N/A	N/A	N/A	0.037	0.136	6.71
N/A	N/A	N/A	N/A	N/A	N/A	0.037	0.135	6.71

N/A	N/A	N/A	N/A	N/A	N/A	0.036	0.136	6.70
N/A	N/A	N/A	N/A	N/A	N/A	0.037	0.135	6.70
N/A	N/A	N/A	N/A	N/A	N/A	0.036	0.138	6.68
N/A	N/A	N/A	N/A	N/A	N/A	0.036	0.137	6.67
N/A	N/A	N/A	N/A	N/A	N/A	0.036	0.136	6.67
N/A	N/A	N/A	N/A	N/A	N/A	0.036	0.134	6.65
N/A	N/A	N/A	N/A	N/A	N/A	0.036	0.137	6.64
N/A	N/A	N/A	N/A	N/A	N/A	0.036	0.135	6.63
N/A	N/A	N/A	N/A	N/A	N/A	0.036	0.135	6.62
N/A	N/A	N/A	N/A	N/A	N/A	0.036	0.137	6.60
N/A	N/A	N/A	N/A	N/A	N/A	0.035	0.137	6.59
N/A	N/A	N/A	N/A	N/A	N/A	0.035	0.137	6.57
N/A	N/A	N/A	N/A	N/A	N/A	0.035	0.137	6.57

Date/heure	Time	O_2	CO	CO_2IR	CO
YYYY-MM-DD HH:MM:SS	min	%	ppm	%	%
2016-06-09 09:27:29	0	17.10	*2932*	2.33	0.29
2016-06-09 09:37:29	10	7.45	*9329*	13.45	0.93
2016-06-09 09:47:29	20	7.37	*14602*	13.82	1.46
2016-06-09 09:57:29	30	6.89	*21485*	14.06	2.15
2016-06-09 10:07:29	40	6.86	*19751*	13.95	1.98
2016-06-09 10:17:29	50	6.77	*18775*	13.94	1.88
2016-06-09 10:27:29	60	6.53	*12707*	14.43	1.27
2016-06-09 10:37:29	70	11.02	*17280*	10.04	1.73
2016-06-09 10:47:29	80	11.74	*13291*	8.98	1.33
2016-06-09 10:57:29	90	11.00	*9429*	9.96	0.94
2016-06-09 11:07:29	100	10.22	*18166*	10.34	1.82
2016-06-09 11:17:29	110	11.31	*5766*	9.39	0.58
2016-06-09 11:27:29	120	11.06	*6265*	9.47	0.63
2016-06-09 11:37:29	130	12.43	*5726*	8.05	0.57
2016-06-09 11:47:29	140	12.88	*4987*	7.41	0.50
2016-06-09 11:57:29	150	14.89	*5835*	5.81	0.58
2016-06-09 12:07:29	160	15.25	*6043*	4.99	0.60
2016-06-09 12:17:29	170	15.29	*5457*	5.02	0.55
2016-06-09 12:27:29	180	15.23	*5311*	5.05	0.53
2016-06-09 12:37:29	190	15.13	*5020*	5.10	0.50
2016-06-09 12:47:29	200	15.15	*5135*	5.17	0.51
2016-06-09 12:57:29	210	15.11	*4902*	5.17	0.49
2016-06-09 13:07:29	220	15.12	*4736*	5.18	0.47
2016-06-09 13:17:29	230	15.16	*4617*	5.16	0.46
2016-06-09 13:27:29	240	15.16	*4483*	5.20	0.45
2016-06-09 13:37:29	250	15.09	*4500*	5.27	0.45
2016-06-09 13:47:29	260	15.17	*4256*	5.23	0.43
2016-06-09 13:57:29	270	15.39	*4207*	5.08	0.42
2016-06-09 14:07:29	280	15.51	*4358*	4.96	0.44
2016-06-09 14:17:29	290	15.54	*4272*	4.82	0.43
2016-06-09 14:27:29	300	15.50	*4091*	4.82	0.41
2016-06-09 14:37:29	310	15.65	*4349*	4.74	0.43
2016-06-09 14:47:29	320	15.71	*4130*	4.70	0.41
2016-06-09 14:57:29	330	15.85	*4043*	4.58	0.40
2016-06-09 15:07:29	340	16.07	*3879*	4.37	0.39
2016-06-09 15:17:29	350	16.20	*3728*	4.30	0.37
2016-06-09 15:27:29	360	16.29	*3611*	4.16	0.36
2016-06-09 15:37:29	370	16.47	*3716*	4.02	0.37
2016-06-09 15:47:29	380	16.51	*3781*	3.94	0.38
2016-06-09 15:57:29	390	16.66	*3939*	3.78	0.39
2016-06-09 16:07:29	400	16.70	*3648*	3.73	0.36
2016-06-09 16:17:29	410	16.77	*3524*	3.70	0.35
2016-06-09 16:27:29	420	16.81	*3510*	3.65	0.35
2016-06-09 16:37:29	430	16.81	*3419*	3.67	0.34
2016-06-09 16:47:29	440	16.92	*3287*	3.56	0.33
2016-06-09 16:57:29	450	17.01	*3284*	3.48	0.33
2016-06-09 17:07:29	460	17.09	*3147*	3.43	0.31
2016-06-09 17:17:29	470	17.08	*3236*	3.42	0.32
2016-06-09 17:27:29	480	17.26	*3078*	3.34	0.31
2016-06-09 17:37:29	490	17.37	*3029*	3.22	0.30
2016-06-09 17:47:29	500	17.48	*2989*	3.10	0.30
2016-06-09 17:57:29	510	17.65	*2985*	2.91	0.30
2016-06-09 18:07:29	520	17.65	*2989*	2.89	0.30

2016-06-09 18:17:29	530	17.70	*2884*	2.88	0.29
2016-06-09 18:27:29	540	17.70	*2816*	2.85	0.28
2016-06-09 18:37:29	550	17.67	*2818*	2.88	0.28
2016-06-09 18:47:29	560	17.77	*2614*	2.82	0.26
2016-06-09 18:57:29	570	17.86	*2549*	2.75	0.42
2016-06-09 19:07:29	580	17.92	*2489*	2.68	0.25
2016-06-09 19:17:29	290	18.07	*2467*	2.58	0.25
2016-06-09 19:27:29	600	18.12	*2368*	2.50	0.24
2016-06-09 19:37:29	610	18.18	*2327*	2.44	0.23
2016-06-09 19:47:29	620	18.46	*2155*	2.22	0.22
2016-06-09 19:57:29	630	18.51	*2095*	2.15	0.21
2016-06-09 20:07:29	640	18.69	*1989*	2.02	0.20
2016-06-09 20:17:29	650	18.74	*1987*	1.95	0.20
2016-06-09 20:27:29	660	18.83	*1966*	1.86	0.20
2016-06-09 20:37:29	670	18.94	*3862*	1.75	0.39
2016-06-09 20:47:29	680	18.97	*1889*	1.73	0.19
2016-06-09 20:57:29	690	19.04	*1841*	1.65	0.18
2016-06-09 21:07:29	700	19.09	*1802*	1.29	0.18
2016-06-09 21:17:29	710	19.10	*1769*	1.29	0.18
2016-06-09 21:27:29	720	19.15	*1741*	1.55	0.17
2016-06-09 21:37:29	730	19.23	*1660*	1.48	0.17
2016-06-09 21:47:29	740	19.32	*1620*	1.43	0.16
2016-06-09 21:57:29	750	19.31	*1654*	1.42	0.17
2016-06-09 22:07:29	760	17.60	*4232*	1.75	0.42
2016-06-09 22:17:29	770	17.76	*3606*	2.66	0.36

Time	Ambient	Flue	Dilution Tunnel	Firebox Top	Firebox Right	Firebox Back	Firebox Bottom	Firebox Left
min	°F	°F	°F	°F	°F	°F	°F	°F
0	76.85	233.27	90.85	262.96	362.09	291.86	305.22	347.15
10	77.22	704.64	159.95	628.90	360.70	289.04	296.20	337.32
20	79.00	780.60	161.95	856.99	369.84	337.08	346.16	328.47
30	80.45	764.48	160.90	817.11	386.42	382.68	389.52	323.71
40	81.25	761.97	160.88	816.70	401.27	419.42	417.90	324.16
50	82.21	761.76	161.66	823.10	416.30	457.42	446.43	327.54
60	82.76	764.42	160.24	854.05	433.36	489.65	469.02	335.58
70	82.62	637.09	133.19	784.72	450.87	512.69	487.11	346.39
80	82.15	541.02	124.53	693.86	452.92	498.41	470.91	363.80
90	81.53	507.94	120.23	680.23	449.32	471.06	444.88	374.59
100	80.61	509.34	118.27	728.38	445.86	451.57	428.86	374.30
110	80.40	502.33	116.40	713.73	445.94	443.03	417.69	370.39
120	80.30	495.53	115.27	669.15	446.84	429.77	412.43	363.89
130	81.06	477.74	112.83	627.38	449.52	421.49	409.90	359.69
140	80.32	437.54	109.81	539.40	452.17	411.78	403.42	358.48
150	80.25	405.26	106.41	482.97	454.09	403.18	396.54	358.36
160	79.82	353.46	103.30	427.51	451.06	393.73	386.27	359.47
170	79.45	324.54	100.42	387.12	440.71	384.47	375.86	358.53
180	79.67	306.63	98.40	363.80	430.42	376.06	368.75	355.55
190	79.28	295.34	97.17	349.95	421.41	364.32	364.84	352.64
200	79.25	288.68	96.17	341.09	414.12	353.39	363.50	350.73
210	78.96	283.60	95.35	334.67	408.37	342.13	362.45	349.31
220	78.85	281.19	94.95	331.40	403.62	333.11	361.31	349.96
230	78.43	279.75	94.78	329.07	399.74	325.82	360.42	349.75
240	78.60	277.98	94.27	326.83	396.69	319.76	359.22	351.17
250	78.62	278.24	94.14	325.66	394.01	314.89	357.17	354.29
260	78.69	280.09	94.12	328.59	391.32	312.03	356.43	355.81
270	78.87	279.27	93.92	327.06	388.73	309.84	355.48	356.28
280	78.94	276.26	93.57	323.19	386.72	307.30	354.19	354.99
290	78.83	273.50	93.31	319.88	385.08	304.61	349.66	353.67
300	78.63	271.72	93.16	316.57	383.95	302.20	345.02	351.96
310	78.66	271.29	93.07	315.43	383.45	299.70	340.76	350.93

320	78.42	270.81	92.83	313.95	382.32	298.00	338.03	349.49
330	78.53	269.84	92.80	310.88	380.92	296.11	335.03	347.86
340	78.63	266.53	92.49	306.85	379.80	294.42	331.55	346.22
350	78.69	263.56	92.28	301.49	378.27	293.32	328.80	342.96
360	78.46	260.34	91.97	296.63	375.88	292.48	324.90	338.60
370	78.25	257.47	91.83	291.77	373.25	290.94	321.28	333.39
380	78.19	254.38	91.38	286.20	370.77	289.00	317.31	329.30
390	78.48	251.81	91.39	282.63	368.23	287.14	313.87	324.57
400	78.47	249.51	91.15	279.81	365.47	286.19	310.55	319.47
410	78.15	247.54	90.74	276.49	362.44	285.11	306.23	313.41
420	78.29	245.57	90.60	273.30	359.46	284.77	300.56	308.39
430	78.04	244.42	90.35	271.82	357.11	283.36	296.40	304.18
440	78.03	243.56	90.24	269.87	355.12	280.04	292.06	300.69
450	77.93	242.25	89.93	267.59	353.35	277.79	288.89	298.24
460	77.99	240.69	89.90	265.67	351.87	275.37	285.54	296.51
470	77.89	239.29	89.65	263.44	350.10	273.57	282.67	294.89
480	77.94	240.10	89.62	262.65	348.33	271.90	279.74	292.81
490	77.73	238.59	89.41	260.27	346.69	270.05	276.83	290.18
500	77.77	235.76	89.18	255.85	344.86	267.85	273.92	287.79
510	77.77	233.31	88.98	251.66	342.81	265.54	270.94	285.30
520	77.23	230.27	88.95	246.65	341.08	262.85	267.48	281.04
530	77.21	228.40	88.55	243.38	339.49	260.45	263.53	277.91
540	77.18	227.45	88.30	240.97	337.95	258.15	259.74	274.13
550	76.87	226.65	88.16	239.49	336.55	256.44	256.24	270.18
560	76.76	225.42	88.08	237.97	335.60	255.07	252.83	267.13
570	76.53	224.52	87.87	235.96	334.82	253.79	249.86	264.69
580	76.55	222.71	87.62	233.97	334.03	252.33	247.18	262.85
590	76.71	220.95	87.46	231.83	332.52	250.36	243.67	260.94
600	76.60	219.03	87.26	229.02	330.04	248.22	240.73	259.41
610	76.35	216.72	87.06	225.90	326.52	245.84	237.27	258.08
620	76.10	214.21	86.32	223.19	323.07	243.54	234.04	256.90
630	73.77	209.46	83.89	217.87	318.43	239.49	230.15	255.87
640	73.30	204.90	82.78	213.20	312.81	235.56	225.61	253.81
650	70.72	199.69	80.81	207.23	306.72	231.16	221.41	251.47

660	72.30	194.59	80.89	201.74	300.02	227.06	216.86	249.68
670	66.87	190.67	79.39	196.39	293.27	222.96	212.15	248.01
680	65.24	185.37	78.50	189.62	285.93	217.37	205.93	244.86
690	73.41	181.11	81.39	185.98	279.66	214.82	202.86	241.47
700	74.86	178.49	81.74	183.06	274.34	212.07	200.13	239.06
710	75.34	175.79	81.85	179.94	268.86	208.81	197.15	236.56
720	75.50	173.02	81.86	176.93	263.39	205.34	193.61	234.46
730	75.52	170.55	81.82	173.82	258.20	202.18	189.72	232.42
740	75.51	167.44	81.69	170.33	253.15	198.52	186.16	230.64
750	75.42	164.37	81.64	166.81	248.14	194.70	182.40	228.91
760	75.27	161.92	81.39	163.93	243.34	191.17	179.22	227.31
770	75.10	169.37	81.46	176.09	240.10	188.43	176.20	230.43

DGM Outlet 1	DGM Inlet 1	Probe 1	DGM Outlet 2	DGM Inlet 2	Probe 2	Probe 3	Draft	Dilution Tunnel
°F	°F	°F	°F	°F	°F	°F	"H_2O	"H_2O
77.87	78.07	86.88	77.16	76.55	82.42	84.61	0.035	0.137
80.98	81.20	81.77	78.64	77.84	82.12	84.05	0.080	0.138
82.77	82.24	81.17	79.09	78.92	82.96	82.15	0.085	0.143
84.73	83.83	80.51	79.59	79.88	83.76	82.80	0.084	0.136
85.94	85.06	83.63	80.09	80.62	84.32	86.59	0.084	0.140
86.51	85.57	82.22	80.41	81.12	84.58	82.30	0.084	0.139
86.87	86.14	82.18	80.57	81.37	84.44	83.69	0.084	0.137
87.15	87.12	83.10	80.81	81.70	83.20	N/A	0.076	0.141
87.55	88.09	82.45	81.28	82.02	81.95	N/A	0.070	0.130
87.66	88.80	81.61	81.51	82.33	81.05	N/A	0.067	0.133
87.95	88.45	81.14	81.60	82.45	81.99	N/A	0.068	0.135
87.97	88.17	83.18	81.78	82.61	82.64	N/A	0.067	0.133
88.15	87.61	81.69	81.81	82.65	82.96	N/A	0.066	0.139
88.39	87.03	80.82	81.67	82.55	82.83	N/A	0.065	0.135
88.71	86.85	83.68	81.65	82.53	82.34	N/A	0.062	0.135
89.28	86.44	84.80	81.77	82.64	82.20	N/A	0.058	0.136
89.18	86.37	86.65	81.83	82.75	82.12	N/A	0.051	0.131
89.19	86.27	84.54	81.95	82.80	81.86	N/A	0.049	0.134
88.93	86.00	81.62	82.00	82.76	81.51	N/A	0.046	0.135
89.27	85.96	81.97	81.91	82.75	82.19	N/A	0.044	0.135
89.08	85.75	84.69	81.78	82.76	84.90	N/A	0.044	0.132
89.16	85.84	84.41	81.96	82.83	83.69	N/A	0.042	0.127
88.64	85.68	81.52	82.21	82.77	80.14	N/A	0.044	0.139
88.83	85.61	81.82	82.09	82.72	80.74	N/A	0.044	0.135
88.64	85.52	81.00	82.25	82.72	80.26	N/A	0.042	0.137
89.19	85.52	82.41	82.37	82.69	82.78	N/A	0.043	0.136
89.54	85.52	85.09	82.36	82.69	85.03	N/A	0.044	0.138
89.56	85.47	86.43	82.83	82.79	85.76	N/A	0.044	0.131
89.44	85.65	86.83	83.16	82.90	85.80	N/A	0.042	0.135
89.31	85.71	86.93	82.93	82.98	85.96	N/A	0.043	0.135
89.16	85.83	86.96	82.75	83.04	85.93	N/A	0.042	0.136
89.04	85.82	87.04	82.67	83.04	85.88	N/A	0.041	0.139

89.09	85.75	87.15	82.38	83.02	85.81	N/A	0.042	0.133
89.29	85.91	83.92	82.11	82.94	85.90	N/A	0.041	0.138
89.28	85.88	83.04	82.22	83.00	85.63	N/A	0.040	0.136
89.28	85.90	83.59	82.39	82.91	85.32	N/A	0.041	0.137
89.29	85.95	83.46	82.61	82.96	85.29	N/A	0.040	0.137
89.42	85.88	83.57	82.70	82.89	85.38	N/A	0.040	0.134
89.57	85.88	83.79	82.96	82.81	85.48	N/A	0.039	0.135
89.66	85.77	83.73	83.15	82.83	85.38	N/A	0.038	0.137
89.77	85.77	83.85	83.26	82.92	85.27	N/A	0.038	0.135
89.80	85.70	83.67	83.38	82.89	85.17	N/A	0.039	0.140
89.68	85.63	83.55	83.51	82.86	85.08	N/A	0.038	0.137
89.75	85.56	83.83	83.49	82.90	84.98	N/A	0.039	0.137
89.74	85.56	83.72	83.49	82.85	84.97	N/A	0.038	0.133
89.88	85.47	83.48	83.51	82.80	84.81	N/A	0.039	0.135
89.72	85.43	83.58	83.56	82.79	84.81	N/A	0.038	0.138
89.74	85.29	83.38	83.37	82.65	84.65	N/A	0.036	0.136
89.74	85.21	83.31	83.11	82.55	84.55	N/A	0.037	0.133
89.72	85.13	83.42	82.90	82.48	84.59	N/A	0.038	0.136
89.64	85.05	83.21	82.85	82.39	84.43	N/A	0.038	0.131
89.61	85.03	83.34	82.94	82.41	84.50	N/A	0.037	0.130
89.54	85.03	83.18	83.02	82.50	84.48	N/A	0.037	0.135
89.52	85.00	83.27	83.17	82.35	84.25	N/A	0.035	0.133
89.43	85.01	83.12	82.98	82.33	84.28	N/A	0.035	0.134
89.35	84.87	83.00	82.65	82.18	84.14	N/A	0.036	0.135
89.33	84.85	82.98	82.55	82.10	84.01	N/A	0.036	0.133
89.28	84.74	82.84	82.21	81.99	84.02	N/A	0.035	0.130
89.20	84.72	88.43	82.12	81.85	84.21	N/A	0.036	0.141
89.19	84.78	80.79	82.65	81.93	84.12	N/A	0.037	0.136
89.21	84.65	82.94	83.07	81.93	83.81	N/A	0.035	0.134
89.13	84.51	83.00	82.82	81.87	83.63	N/A	0.032	0.131
88.99	84.44	83.04	82.97	81.93	83.60	N/A	0.034	0.132
88.82	84.34	82.95	82.87	81.98	83.43	N/A	0.033	0.131
88.77	84.27	82.75	82.43	81.87	83.20	N/A	0.033	0.141
88.66	84.24	82.75	82.48	81.83	83.09	N/A	0.033	0.134

88.57	84.28	82.68	82.67	81.88	83.18	N/A	0.032	0.137
88.47	84.20	82.60	82.81	81.85	82.91	N/A	0.032	0.138
88.43	84.17	82.43	82.84	81.88	82.60	N/A	0.028	0.137
88.43	84.12	82.56	83.00	81.77	83.05	N/A	0.028	0.136
88.53	84.13	82.51	82.89	81.62	83.09	N/A	0.030	0.139
88.55	84.09	82.36	82.69	81.55	82.97	N/A	0.028	0.133
88.49	84.08	82.33	82.46	81.45	83.00	N/A	0.027	0.136
88.50	84.10	82.34	82.33	81.40	83.23	N/A	0.027	0.137
88.50	84.06	82.32	82.58	81.37	83.00	N/A	0.026	0.137
88.47	84.03	82.22	82.87	81.31	82.89	N/A	0.026	0.140
88.44	83.94	82.21	83.07	81.28	82.82	N/A	0.025	0.139
88.38	83.92	82.17	83.21	81.33	82.73	N/A	0.026	0.133

Scale	DGM 1 mean	DGM 2 mean	Scale zeroed
lb	°F	°F	lb
6.56	77.97	76.86	-
54.42	81.09	78.24	47.95
48.87	82.50	79.00	42.39
43.94	84.28	79.74	37.47
39.02	85.50	80.35	32.54
34.42	86.04	80.76	27.94
30.13	86.51	80.97	23.66
26.70	87.13	81.26	20.23
24.77	87.82	81.65	18.30
23.07	88.23	81.92	16.60
21.40	88.20	82.02	14.93
19.85	88.07	82.19	13.37
18.59	87.88	82.23	12.12
17.45	87.71	82.11	10.98
16.67	87.78	82.09	10.20
16.10	87.86	82.20	9.63
15.80	87.78	82.29	9.32
15.55	87.73	82.37	9.07
15.32	87.46	82.38	8.85
15.09	87.62	82.33	8.61
14.85	87.42	82.27	8.38
14.62	87.50	82.39	8.14
14.36	87.16	82.49	7.89
14.12	87.22	82.41	7.64
13.88	87.08	82.49	7.40
13.63	87.36	82.53	7.16
13.39	87.53	82.53	6.92
13.15	87.52	82.81	6.68
12.93	87.55	83.03	6.46
12.70	87.51	82.96	6.23
12.49	87.49	82.90	6.02
12.28	87.43	82.85	5.80

12.06	87.42	82.70	5.59
11.85	87.60	82.52	5.38
11.64	87.58	82.61	5.16
11.46	87.59	82.65	4.98
11.29	87.62	82.78	4.81
11.11	87.65	82.80	4.63
10.94	87.72	82.88	4.46
10.77	87.71	82.99	4.30
10.60	87.77	83.09	4.12
10.44	87.75	83.14	3.97
10.27	87.65	83.18	3.79
10.11	87.66	83.19	3.63
9.95	87.65	83.17	3.48
9.80	87.67	83.16	3.32
9.64	87.58	83.18	3.17
9.47	87.51	83.01	3.00
9.33	87.48	82.83	2.85
9.17	87.43	82.69	2.70
9.04	87.35	82.62	2.57
8.91	87.32	82.68	2.43
8.78	87.28	82.76	2.30
8.65	87.26	82.76	2.18
8.52	87.22	82.66	2.04
8.38	87.11	82.42	1.91
8.25	87.09	82.33	1.78
8.12	87.01	82.10	1.65
8.00	86.96	81.99	1.52
7.89	86.99	82.29	1.41
7.77	86.93	82.50	1.30
7.66	86.82	82.34	1.19
7.56	86.72	82.45	1.08
7.43	86.58	82.42	0.95
7.31	86.52	82.15	0.83
7.22	86.45	82.16	0.74

7.13	86.43	82.27	0.66
7.00	86.33	82.33	0.53
6.86	86.30	82.36	0.39
6.81	86.28	82.38	0.34
6.78	86.33	82.26	0.31
6.75	86.32	82.12	0.28
6.71	86.29	81.95	0.23
6.68	86.30	81.86	0.20
6.64	86.28	81.97	0.17
6.60	86.25	82.09	0.13
6.57	86.19	82.17	0.09
6.48	86.15	82.27	0.00

Manufacturer:	SBI	**Eng:**	Claude Pelland																					
Model:	HE350 Series (FP-15)																							
Date:	2016-06-09																							
Run:	2																							
Control #:	QC20160208																							
Rated Capacity	-	BTU/HR																						
Test Duration:	**770**																							
utput Category:	1	Start	End																					
	Barometer (in.Hg):	29.6	29.8																					
	Dry Bulb (F):	77	75																					
	Humidity (%):	74	91																					
Average Stove Temperature:		0.00																						
Moisture content of wood (wet basis):		18.77																						
	Average	0.00	0.00	0.00	308.78	77.67	98.04	#DIV/0!	0.00	0.00	0.00	0.00	0.00	0.00		85.25	88.55	82.85		82.96	83.25	82.42	0.1355
*	*	*	*	*	*1	*2	*3	*4							*	*	*	*	*	*	*	*	*	*
Elapsed	Weight				Flue	Room	Tunnel	Outlet	door	ash door	left side	back	ight side	front	DGM 1	DGM 1	DGM 1	Filter 1	DGM 2	DGM 2	DGM 2	Filter 2	Tunnel	
Time	Remaining	CO	CO_2	O_2	Gas	Temp	Dry Bulb	air							Reading	Inlet T	Outlet T	Temp	Reading	Inlet T	Outlet T	Temp	Velocity	
0	51.8	0.00	0.00	0.00	233.27	76.85	90.85		0.00	0.00	0.00	0.00	0.00	0.00	950.851	78.07	77.87	86.88	1113.539	76.55	77.16	82.42	0.137	
10	47.9	0.00	0.00	0.00	704.64	77.22	159.95		0.00	0.00	0.00	0.00	0.00	0.00	951.756	81.20	80.98	81.77	1114.484	77.84	78.64	82.12	0.138	
20	42.4	0.00	0.00	0.00	780.60	79.00	161.95		0.00	0.00	0.00	0.00	0.00	0.00	952.662	82.24	82.77	81.17	1115.362	78.92	79.09	82.96	0.143	
30	37.5	0.00	0.00	0.00	764.48	80.45	160.90		0.00	0.00	0.00	0.00	0.00	0.00	953.538	83.83	84.73	80.51	1116.236	79.88	79.59	83.76	0.136	
40	32.5	0.00	0.00	0.00	761.97	81.25	160.88		0.00	0.00	0.00	0.00	0.00	0.00	954.436	85.06	85.94	83.63	1117.124	80.62	80.09	84.32	0.140	
50	27.9	0.00	0.00	0.00	761.76	82.21	161.66		0.00	0.00	0.00	0.00	0.00	0.00	955.331	85.57	86.51	82.22	1118.005	81.12	80.41	84.58	0.139	
60	23.7	0.00	0.00	0.00	764.42	82.76	160.24		0.00	0.00	0.00	0.00	0.00	0.00	956.226	86.14	86.87	82.18	1118.873	81.37	80.57	84.44	0.137	
70	20.2	0.00	0.00	0.00	637.09	82.62	133.19		0.00	0.00	0.00	0.00	0.00	0.00	957.125	87.12	87.15	83.10	1119.712	81.70	80.81	83.20	0.141	
80	18.3	0.00	0.00	0.00	541.02	82.15	124.53		0.00	0.00	0.00	0.00	0.00	0.00	958.013	88.09	87.55	82.45	1120.577	82.02	81.28	81.95	0.130	
90	16.6	0.00	0.00	0.00	507.94	81.53	120.23		0.00	0.00	0.00	0.00	0.00	0.00	958.912	88.80	87.66	81.61	1121.459	82.33	81.51	81.05	0.133	
100	14.9	0.00	0.00	0.00	509.34	80.61	118.27		0.00	0.00	0.00	0.00	0.00	0.00	959.809	88.45	87.95	81.14	1122.345	82.45	81.60	81.99	0.135	
110	13.4	0.00	0.00	0.00	502.33	80.40	116.40		0.00	0.00	0.00	0.00	0.00	0.00	960.703	88.17	87.97	83.18	1123.224	82.61	81.78	82.64	0.133	
120	12.1	0.00	0.00	0.00	495.53	80.30	115.27		0.00	0.00	0.00	0.00	0.00	0.00	961.600	87.61	88.15	81.69	1124.118	82.65	81.81	82.96	0.139	
130	11.0	0.00	0.00	0.00	477.74	81.06	112.83		0.00	0.00	0.00	0.00	0.00	0.00	962.499	87.03	88.39	80.82	1125.029	82.55	81.67	82.83	0.135	
140	10.2	0.00	0.00	0.00	437.54	80.32	109.81		0.00	0.00	0.00	0.00	0.00	0.00	963.396	86.85	88.71	83.68	1125.936	82.53	81.65	82.34	0.135	
150	9.6	0.00	0.00	0.00	405.26	80.25	106.41		0.00	0.00	0.00	0.00	0.00	0.00	964.293	86.44	89.28	84.80	1126.858	82.64	81.77	82.20	0.136	
160	9.3	0.00	0.00	0.00	353.46	79.82	103.30		0.00	0.00	0.00	0.00	0.00	0.00	965.191	86.37	89.18	86.65	1127.785	82.75	81.83	82.12	0.131	
170	9.1	0.00	0.00	0.00	324.54	79.45	100.42		0.00	0.00	0.00	0.00	0.00	0.00	966.089	86.27	89.19	84.54	1128.729	82.80	81.95	81.86	0.134	
180	8.8	0.00	0.00	0.00	306.63	79.67	98.40		0.00	0.00	0.00	0.00	0.00	0.00	966.990	86.00	88.93	81.62	1129.665	82.76	82.00	81.51	0.135	
190	8.6	0.00	0.00	0.00	295.34	79.28	97.17		0.00	0.00	0.00	0.00	0.00	0.00	967.889	85.96	89.27	81.97	1130.627	82.75	81.91	82.19	0.135	
200	8.4	0.00	0.00	0.00	288.68	79.25	96.17		0.00	0.00	0.00	0.00	0.00	0.00	968.787	85.75	89.08	84.69	1131.570	82.76	81.78	84.90	0.132	
210	8.1	0.00	0.00	0.00	283.60	78.96	95.35		0.00	0.00	0.00	0.00	0.00	0.00	969.682	85.84	89.16	84.41	1132.518	82.83	81.96	83.69	0.127	
220	7.9	0.00	0.00	0.00	281.19	78.85	94.95		0.00	0.00	0.00	0.00	0.00	0.00	970.579	85.68	88.64	81.52	1133.453	82.77	82.21	80.14	0.139	
230	7.6	0.00	0.00	0.00	279.75	78.43	94.78		0.00	0.00	0.00	0.00	0.00	0.00	971.474	85.61	88.83	81.82	1134.402	82.72	82.09	80.74	0.135	
240	7.4	0.00	0.00	0.00	277.98	78.60	94.27		0.00	0.00	0.00	0.00	0.00	0.00	972.368	85.52	88.64	81.00	1135.342	82.72	82.25	80.26	0.137	
250	7.2	0.00	0.00	0.00	278.24	78.62	94.14		0.00	0.00	0.00	0.00	0.00	0.00	973.259	85.52	89.19	82.41	1136.300	82.69	82.37	82.78	0.136	
260	6.9	0.00	0.00	0.00	280.09	78.69	94.12		0.00	0.00	0.00	0.00	0.00	0.00	974.148	85.52	89.54	85.09	1137.263	82.69	82.36	85.03	0.138	
270	6.7	0.00	0.00	0.00	279.27	78.87	93.92		0.00	0.00	0.00	0.00	0.00	0.00	975.035	85.47	89.56	82.83	1138.218	86.43	85.76	82.79	0.131	
280	6.5	0.00	0.00	0.00	276.26	78.94	93.57		0.00	0.00	0.00	0.00	0.00	0.00	975.929	85.65	89.44	83.16	1139.173	86.83	85.80	82.90	0.135	
290	6.2	0.00	0.00	0.00	273.50	78.83	93.31		0.00	0.00	0.00	0.00	0.00	0.00	976.826	85.71	89.31	82.93	1140.126	86.93	85.96	82.98	0.135	
300	6.0	0.00	0.00	0.00	271.72	78.63	93.16		0.00	0.00	0.00	0.00	0.00	0.00	977.726	85.83	89.16	82.75	1141.079	86.96	85.93	83.04	0.136	
310	5.8	0.00	0.00	0.00	271.29	78.66	93.07		0.00	0.00	0.00	0.00	0.00	0.00	978.622	85.82	89.04	82.67	1142.023	87.04	85.88	83.04	0.139	
320	5.6	0.00	0.00	0.00	270.81	78.42	92.83		0.00	0.00	0.00	0.00	0.00	0.00	979.522	85.75	89.09	82.38	1142.971	87.15	85.81	83.02	0.133	
330	5.4	0.00	0.00	0.00	269.84	78.53	92.80		0.00	0.00	0.00	0.00	0.00	0.00	980.421	85.91	89.29	82.11	1143.918	83.92	85.90	82.94	0.138	
340	5.2	0.00	0.00	0.00	266.53	78.63	92.49		0.00	0.00	0.00	0.00	0.00	0.00	981.316	85.88	89.28	82.22	1144.863	83.04	85.63	83.00	0.136	
350	5.0	0.00	0.00	0.00	263.56	78.69	92.28		0.00	0.00	0.00	0.00	0.00	0.00	982.209	85.90	89.28	82.39	1145.815	83.59	85.32	82.91	0.137	
360	4.8	0.00	0.00	0.00	260.34	78.46	91.97		0.00	0.00	0.00	0.00	0.00	0.00	983.097	85.95	89.29	82.61	1146.759	83.46	85.29	82.96	0.137	
370	4.6	0.00	0.00	0.00	257.47	78.25	91.83		0.00	0.00	0.00	0.00	0.00	0.00	983.989	85.88	89.42	82.70	1147.725	83.57	85.38	82.89	0.134	
380	4.5	0.00	0.00	0.00	254.38	78.19	91.38		0.00	0.00	0.00	0.00	0.00	0.00	984.878	85.88	89.57	82.96	1148.692	83.79	85.48	82.81	0.135	
390	4.3	0.00	0.00	0.00	251.81	78.48	91.39		0.00	0.00	0.00	0.00	0.00	0.00	985.759	85.77	89.66	83.15	1149.655	83.73	85.38	82.83	0.137	
400	4.1	0.00	0.00	0.00	249.51	78.47	91.15		0.00	0.00	0.00	0.00	0.00	0.00	986.645	85.77	89.77	83.26	1150.635	83.85	85.27	82.92	0.135	
410	4.0	0.00	0.00	0.00	247.54	78.15	90.74		0.00	0.00	0.00	0.00	0.00	0.00	987.529	85.70	89.80	83.38	1151.615	83.67	85.17	82.89	0.140	
420	3.8	0.00	0.00	0.00	245.57	78.29	90.60		0.00	0.00	0.00	0.00	0.00	0.00	988.414	85.63	89.68	83.51	1152.585	83.55	85.08	82.86	0.137	
430	3.6	0.00	0.00	0.00	244.42	78.04	90.35		0.00	0.00	0.00	0.00	0.00	0.00	989.299	85.56	89.75	83.49	1153.559	83.83	84.98	82.90	0.137	
440	3.5	0.00	0.00	0.00	243.56	78.03	90.24		0.00	0.00	0.00	0.00	0.00	0.00	990.182	85.56	89.74	83.49	1154.535	83.72	84.97	82.85	0.133	
450	3.3	0.00	0.00	0.00	242.25	77.93	89.93		0.00	0.00	0.00	0.00	0.00	0.00	991.067	85.47	89.88	83.51	1155.514	83.48	84.81	82.80	0.135	
460	3.2	0.00	0.00	0.00	240.69	77.99	89.90		0.00	0.00	0.00	0.00	0.00	0.00	991.949	85.43	89.72	83.56	1156.488	83.58	84.81	82.79	0.138	
470	3.0	0.00	0.00	0.00	239.29	77.89	89.65		0.00	0.00	0.00	0.00	0.00	0.00	992.834	85.29	89.74	83.37	1157.458	83.38	84.65	82.65	0.136	
480	2.9	0.00	0.00	0.00	240.10	77.94	89.62		0.00	0.00	0.00	0.00	0.00	0.00	993.719	85.21	89.74	83.11	1158.431	83.31	84.55	82.55	0.133	
490	2.7	0.00	0.00	0.00	238.59	77.73	89.41		0.00	0.00	0.00	0.00	0.00	0.00	994.603	85.13	89.72	82.90	1159.411	83.42	84.59	82.48	0.136	
500	2.6	0.00	0.00	0.00	235.76	77.77	89.18		0.00	0.00	0.00	0.00	0.00	0.00	995.485	85.05	89.64	82.85	1160.384	83.21	84.43	82.39	0.131	
510	2.4	0.00	0.00	0.00	233.31	77.77	88.98		0.00	0.00	0.00	0.00	0.00	0.00	996.370	85.03	89.61	82.94	1161.356	83.34	84.50	82.41	0.130	
520	2.3	0.00	0.00	0.00	230.27	77.23	88.95		0.00	0.00	0.00	0.00	0.00	0.00	997.253	85.03	89.54	83.02	1162.330	83.18	84.48	82.50	0.135	
530	2.2	0.00	0.00	0.00	228.40	77.21	88.55		0.00	0.00	0.00	0.00	0.00	0.00	998.138	85.00	89.52	83.17	1163.303	83.27	84.25	82.35	0.133	
540	2.0	0.00	0.00	0.00	227.45	77.18	88.30		0.00	0.00	0.00	0.00	0.00	0.00	999.028	85.01	89.43	82.98	1164.279	83.12	84.28	82.33	0.134	
550	1.9	0.00	0.00	0.00	226.65	76.87	88.16		0.00	0.00	0.00	0.00	0.00	0.00	999.911	84.87	89.35	82.65	1165.250	83.00	84.14	82.18	0.135	
560	1.8	0.00	0.00	0.00	225.42	76.76	88.08		0.00	0.00	0.00	0.00	0.00	0.00	1000.798	84.85	89.33	82.55	1166.225	82.98	84.01	82.10	0.133	
570	1.6	0.00	0.00	0.00	224.52	76.53	87.87		0.00	0.00	0.00	0.00	0.00	0.00	1001.682	84.74	89.28	82.21	1167.195	82.84	84.02	81.99	0.130	
580	1.5	0.00	0.00	0.00	222.71	76.55	87.62		0.00	0.00	0.00	0.00	0.00	0.00	1002.562	84.72	89.20	82.12	1168.167	88.43	84.21	81.85	0.141	
590	1.4	0.00	0.00	0.00	220.95	76.71	87.46		0.00	0.00	0.00	0.00	0.00	0.00	1003.435	84.78	89.19	82.65	1169.137	80.79	84.12	81.93	0.136	
600	1.3	0.00	0.00	0.00	219.03	76.60	87.26		0.00	0.00	0.00	0.00	0.00	0.00	1004.320	84.65	89.21	83.07	1170.106	82.94	83.81	81.93	0.134	
610	1.2	0.00	0.00	0.00	216.72	76.35	87.06		0.00	0.00	0.00	0.00	0.00	0.00	1005.191	84.51	89.13	82.82	1171.079	83.00	83.63	81.87	0.131	
620	1.1	0.00	0.00	0.00	214.21	76.10	86.32		0.00	0.00	0.00	0.00	0.00	0.00	1006.073	84.44	88.99	82.97	1172.049	83.04	83.60	81.93	0.132	
630	1.0	0.00	0.00	0.00	209.46	73.77	83.89		0.00	0.00	0.00	0.00	0.00	0.00	1006.957	84.34	88.82	82.87	1173.015	82.95	83.43	81.98	0.131	
640	0.8	0.00	0.00	0.00	204.90	73.30	82.78		0.00	0.00	0.00	0.00	0.00	0.00	1007.839	84.27	88.77	82.43	1173.978	82.75	83.20	81.87	0.141	
650	0.7	0.00	0.00	0.00	199.69	70.72	80.81		0.00	0.00	0.00	0.00	0.00	0.00	1008.720	84.24	88.66	82.48	1174.947	82.75	83.09	81.83	0.134	
660	0.7	0.00	0.00	0.00	194.59	72.30	80.89		0.00	0.00	0.00	0.00	0.00	0.00	1009.595	84.28	88.57	82.67	1175.914	82.68	83.18	81.88	0.137	
670	0.5	0.00	0.00	0.00	190.67	66.87	79.39		0.00	0.00	0.00	0.00	0.00	0.00	1010.478	84.20	88.47	82.81	1176.874	82.60	82.91	81.85	0.138	
680	0.4	0.00	0.00	0.00	185.37	65.24	78.50		0.00	0.00	0.00	0.00	0.00	0.00	1011.356	84.17	88.43	82.84	1177.844	82.43	82.60	81.88	0.137	
690	0.3	0.00	0.00	0.00	181.11	73.41	81.39		0.00	0.00	0.00	0.00	0.00	0.00	1012.231	84.12	88.43	83.00	1178.806	82.56	83.05	81.77	0.136	
700	0.3	0.00	0.00	0.00	178.49	74.86	81.74		0.00	0.00	0.00	0.00	0.00	0.00	1013.105	84.13	88.53	82.89	1179.769	82.51	83.09	81.62	0.139	
710	0.3	0.00	0.00	0.00	175.79	75.34	81.85		0.00	0.00	0.00	0.00	0.00	0.00	1013.982	84.09	88.55	82.69	1180.736	82.36	82.97	81.55	0.133	
720	0.2	0.00	0.00	0.00	173.02	75.50	81.86		0.00	0.00	0.00	0.00	0.00	0.00	1014.863	84.08	88.49	82.46	1181.712	82.33	83.00	81.45	0.136	
730	0.2	0.00	0.00	0.00	170.55	75.52	81.82		0.00	0.00	0.00	0.00	0.00	0.00	1015.724	84.10	88.50	82.33	1182.661	82.34	83.23	81.40	0.137	
740	0.2	0.00	0.00	0.00	167.44	75.51	81.69		0.00	0.00	0.00	0.00	0.00	0.00	1016.587	84.06	88.50	82.58	1183.629	82.32	83.00	81.37	0.137	
750	0.1	0.00	0.00	0.00	164.37	75.42	81.64		0.00	0.00	0.00	0.00	0.00	0.00	1017.454	84.03	88.47	82.87	1184.590	82.22	82.89	81.31	0.140	
760	0.1	0.00	0.00	0.00	161.92	75.27	81.39		0.00	0.00	0.00	0.00	0.00	0.00	1018.320	83.94	88.44	83.07	1185.552	82.21	82.82	81.28	0.139	
770	0.0	0.00	0.00	0.00	169.37	75.10	81.46		0.00	0.00	0.00	0.00	0.00	0.00	1019.206	83.92	88.38	83.21	1186.537	82.17	82.73	81.33	0.133	

Manufacturer:	SBI
Model:	HE350 Series (FP-15)
Date:	6-9-16
Run:	2
Project #:	QC20160208
	-
Test Duration:	770
Total Gas Volume (DGM 1):	65.861
Total Gas Volume (DGM 2):	70.616
Average Barometric Pressure:	29.7
Molecular Weight:	28.78
Pitot Correction:	0.9587
Calibration Factor (DGM #1):	1.0060
Calibration Factor (DGM #2):	1.0030
(1) VS:	0.0334
(2) VS:	0.0312

Stack area (ft2):	0.3491
Wood moisture (% wet):	18.77
Load Weight (lbs wet):	51.83
Burn Rate (Dry kg/hr):	1.488
Final Temperature (DGM #1) Degrees Rankin:	546.898
Final Temperature (DGM #2) Degrees Rankin:	543.101
Final Tunnel Temperature Degrees Rankin:	558.037
Final Tunnel Velocity (feet per second):	20.479
Standardized Tunnel Flow (dscfm):	394.6293

(ASTM E2515 Formula)

Manufacturer:	SBI
Model:	HE350 Series (FP-15)
Date:	6-9-16
Run:	2

0.044 * Draft	Elapsed Time	DGM 1 Reading	DGM 1 Inlet T	DGM 1 Outlet T	DGM 2 Reading	DGM 2 Inlet T	DGM 2 Outlet T	Tunnel Dry Bulb	Filter Face Velocity DGM 1	Filter Face Velocity DGM 2	Delta-P (in. H2O) Tunnel	Tunnel Velocity Ft/Sec	Average Inlet + Outlet Temp. Meter 1 Deg. R	Average Inlet + Outlet Temp. Meter 2 Deg. R	Average **99.9** **Proportional Rates** **PR1**	Average **99.9** **PR2**	#1 dDGM Vol.Std. (ft3)	#2 dDGM Vol.Std. (ft3)	Time	Average **0.37** SQRT Delta-P
0.035	0.00	950.85	78.07	77.87	#####	76.55	77.16	90.85			0.137	#####	538.0	536.9					0	0.370788
0.080	10.00	951.76	81.20	80.98	#####	77.84	78.64	159.9	4.71	4.93	0.138	#####	541.1	538.2	108.81	106.03	0.882	0.923	10	0.371191
0.085	20.00	952.66	82.24	82.77	#####	78.92	79.09	162	4.71	4.58	0.143	#####	542.5	539.0	106.60	96.64	0.880	0.856	20	0.377927
0.084	30.00	953.54	83.83	84.73	#####	79.88	79.59	160.9	4.54	4.55	0.136	#####	544.3	539.7	104.87	98.25	0.848	0.851	30	0.368701
0.084	40.00	954.44	85.06	85.94	#####	80.62	80.09	160.9	4.64	4.62	0.140	#####	545.5	540.4	105.27	97.97	0.868	0.864	40	0.374833
0.084	50.00	955.33	85.57	86.51	#####	81.12	80.41	161.7	4.62	4.58	0.139	#####	546.0	540.8	105.51	97.79	0.864	0.856	50	0.372243
0.084	60.00	956.23	86.14	86.87	#####	81.37	80.57	160.2	4.62	4.51	0.137	#####	546.5	541.0	105.67	96.58	0.863	0.843	60	0.370622
0.076	70.00	957.13	87.12	87.15	#####	81.70	80.81	133.2	4.63	4.36	0.141	#####	547.1	541.3	102.16	89.97	0.866	0.815	70	0.375697
0.070	80.00	958.01	88.09	87.55	#####	82.02	81.28	124.5	4.57	4.49	0.130	#####	547.8	541.7	104.19	95.87	0.854	0.839	80	0.360302
0.067	90.00	958.91	88.80	87.66	#####	82.33	81.51	120.2	4.62	4.57	0.133	#####	548.2	541.9	103.77	96.22	0.864	0.855	90	0.36434
0.068	100.00	959.81	88.45	87.95	#####	82.45	81.60	118.3	4.61	4.59	0.135	#####	548.2	542.0	102.60	95.73	0.862	0.859	100	0.367099
0.067	110.00	960.70	88.17	87.97	#####	82.61	81.78	116.4	4.60	4.56	0.133	#####	548.1	542.2	102.96	95.52	0.860	0.852	110	0.364173
0.066	120.00	961.60	87.61	88.15	#####	82.65	81.81	115.3	4.61	4.63	0.139	#####	547.9	542.2	101.06	94.96	0.863	0.866	120	0.372158
0.065	130.00	962.50	87.03	88.39	#####	82.55	81.67	112.8	4.63	4.72	0.135	#####	547.7	542.1	102.54	97.95	0.865	0.883	130	0.367046
0.062	140.00	963.40	86.85	88.71	#####	82.53	81.65	109.8	4.62	4.70	0.135	#####	547.8	542.1	101.83	97.09	0.863	0.879	140	0.367712
0.058	150.00	964.29	86.44	89.28	#####	82.64	81.77	106.4	4.61	4.78	0.136	#####	547.9	542.2	101.29	98.16	0.863	0.894	150	0.368476
0.051	160.00	965.19	86.37	89.18	#####	82.75	81.83	103.3	4.62	4.80	0.131	#####	547.8	542.3	103.17	100.35	0.864	0.898	160	0.361289
0.049	170.00	966.09	86.27	89.19	#####	82.80	81.95	100.4	4.62	4.89	0.134	#####	547.7	542.4	101.76	100.74	0.864	0.915	170	0.365403
0.046	180.00	966.99	86.00	88.93	#####	82.76	82.00	98.4	4.64	4.85	0.135	#####	547.5	542.4	101.32	99.03	0.867	0.907	180	0.367923
0.044	190.00	967.89	85.96	89.27	#####	82.75	81.91	97.17	4.63	4.98	0.135	#####	547.6	542.3	101.02	101.78	0.865	0.932	190	0.367567
0.044	200.00	968.79	85.75	89.08	#####	82.76	81.78	96.17	4.62	4.89	0.132	#####	547.4	542.3	102.07	100.87	0.865	0.914	200	0.363327
0.042	210.00	969.68	85.84	89.16	#####	82.83	81.96	95.35	4.61	4.91	0.127	#####	547.5	542.4	103.63	103.29	0.862	0.918	210	0.356283
0.044	220.00	970.58	85.68	88.64	#####	82.77	82.21	94.95	4.62	4.84	0.139	#####	547.2	542.5	99.17	97.11	0.864	0.906	220	0.373469
0.044	230.00	971.47	85.61	88.83	#####	82.72	82.09	94.78	4.61	4.92	0.135	#####	547.2	542.4	100.60	100.26	0.862	0.919	230	0.367223
0.042	240.00	972.37	85.52	88.64	#####	82.72	82.25	94.27	4.61	4.87	0.137	#####	547.1	542.5	99.54	98.30	0.861	0.911	240	0.370719
0.043	250.00	973.26	85.52	89.19	#####	82.69	82.37	94.14	4.59	4.96	0.136	#####	547.4	542.5	99.74	100.80	0.858	0.928	250	0.368338
0.044	260.00	974.15	85.52	89.54	#####	82.69	82.36	94.12	4.58	4.99	0.138	#####	547.5	542.5	98.66	100.52	0.856	0.933	260	0.371277
0.044	270.00	975.04	85.47	89.56	#####	86.43	85.76	93.92	4.57	4.91	0.131	#####	547.5	546.1	100.98	100.92	0.854	0.919	270	0.361878
0.042	280.00	975.93	85.65	89.44	#####	86.83	85.80	93.57	4.60	4.91	0.135	#####	547.5	546.3	100.36	99.45	0.861	0.919	280	0.366828
0.043	290.00	976.83	85.71	89.31	#####	86.93	85.96	93.31	4.62	4.90	0.135	#####	547.5	546.4	100.59	99.07	0.863	0.916	290	0.367191
0.042	300.00	977.73	85.83	89.16	#####	86.96	85.93	93.16	4.63	4.90	0.136	#####	547.5	546.4	100.34	98.49	0.866	0.916	300	0.369329
0.041	310.00	978.62	85.82	89.04	#####	87.04	85.88	93.07	4.61	4.85	0.139	#####	547.4	546.5	99.03	96.69	0.863	0.908	310	0.372583
0.042	320.00	979.52	85.75	89.09	#####	87.15	85.81	92.83	4.63	4.87	0.133	#####	547.4	546.5	101.48	99.05	0.867	0.912	320	0.365141
0.041	330.00	980.42	85.91	89.29	#####	83.92	85.90	92.8	4.63	4.88	0.138	#####	547.6	544.9	99.61	97.86	0.865	0.913	330	0.371333
0.040	340.00	981.32	85.88	89.28	#####	83.04	85.63	92.49	4.61	4.88	0.136	#####	547.6	544.3	99.65	98.33	0.861	0.912	340	0.369445
0.041	350.00	982.21	85.90	89.28	#####	83.59	85.32	92.28	4.60	4.91	0.137	#####	547.6	544.5	99.05	98.64	0.860	0.919	350	0.37079
0.040	360.00	983.10	85.95	89.29	#####	83.46	85.29	91.97	4.57	4.87	0.137	#####	547.6	544.4	98.68	98.03	0.855	0.911	360	0.369937
0.040	370.00	983.99	85.88	89.42	#####	83.57	85.38	91.83	4.59	4.99	0.134	#####	547.6	544.5	100.14	101.31	0.858	0.932	370	0.366125
0.039	380.00	984.88	85.88	89.57	#####	83.79	85.48	91.38	4.57	4.99	0.135	#####	547.7	544.6	99.49	101.07	0.855	0.933	380	0.367024
0.038	390.00	985.76	85.77	89.66	#####	83.73	85.38	91.39	4.53	4.97	0.137	#####	547.7	544.6	97.76	99.83	0.848	0.929	390	0.370168
0.038	400.00	986.65	85.77	89.77	#####	83.85	85.27	91.15	4.56	5.06	0.135	#####	547.8	544.6	99.18	102.50	0.852	0.946	400	0.366772
0.039	410.00	987.53	85.70	89.80	#####	83.67	85.17	90.74	4.55	5.06	0.140	#####	547.7	544.4	97.11	100.64	0.851	0.946	410	0.373635
0.038	420.00	988.41	85.63	89.68	#####	83.55	85.08	90.6	4.55	5.01	0.137	#####	547.7	544.3	98.25	100.66	0.852	0.936	420	0.369818
0.039	430.00	989.30	85.56	89.75	#####	83.83	84.98	90.35	4.55	5.03	0.137	#####	547.7	544.4	98.11	100.90	0.852	0.940	430	0.370251
0.038	440.00	990.18	85.56	89.74	#####	83.72	84.97	90.24	4.54	5.04	0.133	#####	547.7	544.3	99.21	102.49	0.850	0.942	440	0.365296
0.039	450.00	991.07	85.47	89.88	#####	83.48	84.81	89.93	4.55	5.06	0.135	#####	547.7	544.1	98.65	102.08	0.852	0.945	450	0.368064
0.038	460.00	991.95	85.43	89.72	#####	83.58	84.81	89.9	4.54	5.03	0.138	#####	547.6	544.2	97.37	100.53	0.849	0.941	460	0.371756
0.036	470.00	992.83	85.29	89.74	#####	83.38	84.65	89.65	4.56	5.01	0.136	#####	547.5	544.0	98.50	100.98	0.852	0.937	470	0.368736
0.037	480.00	993.72	85.21	89.74	#####	83.31	84.55	89.62	4.56	5.03	0.133	#####	547.5	543.9	99.48	102.32	0.852	0.940	480	0.365159
0.038	490.00	994.60	85.13	89.72	#####	83.42	84.59	89.41	4.55	5.06	0.136	#####	547.4	544.0	98.25	101.85	0.851	0.947	490	0.36931
0.038	500.00	995.49	85.05	89.64	#####	83.21	84.43	89.18	4.54	5.03	0.131	#####	547.3	543.8	99.85	103.04	0.849	0.940	500	0.36259
0.037	510.00	996.37	85.03	89.61	#####	83.34	84.50	88.98	4.56	5.02	0.130	#####	547.3	543.9	100.89	103.60	0.852	0.939	510	0.36005
0.037	520.00	997.25	85.03	89.54	#####	83.18	84.48	88.95	4.55	5.03	0.135	#####	547.3	543.8	98.77	101.89	0.850	0.941	520	0.366964
0.035	530.00	998.14	85.00	89.52	#####	83.27	84.25	88.55	4.56	5.03	0.133	#####	547.3	543.8	99.56	102.39	0.852	0.940	530	0.364774
0.035	540.00	999.03	85.01	89.43	#####	83.12	84.28	88.3	4.58	5.04	0.134	#####	547.2	543.7	99.89	102.47	0.857	0.943	540	0.365599
0.036	550.00	999.91	84.87	89.35	#####	83.00	84.14	88.16	4.55	5.02	0.135	#####	547.1	543.6	98.55	101.38	0.851	0.939	550	0.367766
0.036	560.00	######	84.85	89.33	#####	82.98	84.01	88.08	4.57	5.04	0.133	#####	547.1	543.5	99.94	102.79	0.855	0.943	560	0.364298
0.035	570.00	######	84.74	89.28	#####	82.84	84.02	87.87	4.55	5.02	0.130	#####	547.0	543.4	100.57	103.25	0.852	0.938	570	0.360836
0.036	580.00	######	84.72	89.20	#####	88.43	84.21	87.62	4.53	5.00	0.141	#####	547.0	546.3	96.35	98.50	0.848	0.935	580	0.374915
0.037	590.00	######	84.78	89.19	#####	80.79	84.12	87.46	4.50	5.02	0.136	#####	547.0	542.5	97.10	101.30	0.841	0.940	590	0.368959
0.035	600.00	######	84.65	89.21	#####	82.94	83.81	87.26	4.56	5.01	0.134	#####	546.9	543.4	99.13	101.54	0.853	0.937	600	0.366398
0.032	610.00	######	84.51	89.13	#####	83.00	83.63	87.06	4.49	5.03	0.131	#####	546.8	543.3	98.73	103.17	0.840	0.941	610	0.362122
0.034	620.00	######	84.44	88.99	#####	83.04	83.60	86.32	4.55	5.02	0.132	#####	546.7	543.3	99.69	102.52	0.850	0.938	620	0.363038
0.033	630.00	######	84.34	88.82	#####	82.95	83.43	83.89	4.56	5.00	0.131	#####	546.6	543.2	100.15	102.33	0.852	0.935	630	0.361584
0.033	640.00	######	84.27	88.77	#####	82.75	83.20	82.78	4.55	4.98	0.141	#####	546.5	543.0	96.24	98.30	0.851	0.932	640	0.375126
0.033	650.00	######	84.24	88.66	#####	82.75	83.09	80.81	4.54	5.02	0.134	#####	546.5	542.9	98.36	101.20	0.850	0.938	650	0.366051
0.032	660.00	######	84.28	88.57	#####	82.68	83.18	80.89	4.51	5.00	0.137	#####	546.4	542.9	96.58	99.84	0.844	0.936	660	0.370306
0.032	670.00	######	84.20	88.47	#####	82.60	82.91	79.39	4.56	4.97	0.138	#####	546.3	542.8	97.09	98.76	0.852	0.929	670	0.371357
0.028	680.00	######	84.17	88.43	#####	82.43	82.60	78.5	4.53	5.02	0.137	#####	546.3	542.5	96.69	100.03	0.847	0.940	680	0.370501
0.028	690.00	######	84.12	88.43	#####	82.56	83.05	81.39	4.51	4.98	0.136	#####	546.3	542.8	97.09	99.84	0.844	0.931	690	0.36873
0.030	700.00	######	84.13	88.53	#####	82.51	83.09	81.74	4.51	4.99	0.139	#####	546.3	542.8	96.03	98.98	0.843	0.932	700	0.372441
0.028	710.00	######	84.09	88.55	#####	82.36	82.97	81.85	4.52	5.01	0.133	#####	546.3	542.7	98.24	101.39	0.846	0.936	710	0.36534
0.027	720.00	######	84.08	88.49	#####	82.33	83.00	81.86	4.55	5.05	0.136	#####	546.3	542.7	97.80	101.39	0.850	0.945	720	0.368704
0.027	730.00	######	84.10	88.50	#####	82.34	83.23	81.82	4.44	4.91	0.137	#####	546.3	542.8	95.36	98.32	0.831	0.919	730	0.369539
0.026	740.00	######	84.06	88.50	#####	82.32	83.00	81.69	4.45	5.01	0.137	#####	546.3	542.7	95.37	100.10	0.833	0.937	740	0.370348
0.026	750.00	######	84.03	88.47	#####	82.22	82.89	81.64	4.47	4.98	0.140	#####	546.2	542.6	94.74	98.30	0.837	0.931	750	0.374544
0.025	760.00	######	83.94	88.44	#####	82.21	82.82	81.39	4.47	4.98	0.139	#####	546.2	542.5	95.21	98.99	0.836	0.932	760	0.372285
0.026	770.00	######	83.92	88.38	#####	82.17	82.73	81.46	4.57	5.10	0.133	#####	546.1	542.4	99.30	103.34	0.855	0.954	770	0.365261

Intertek Testing Services

Manufacturer:	**SBI**
Model:	**HE350 Series (FP-15)**
Date:	**6-9-16**
Run:	**2**
Project #:	**QC20160208**
Test Duration: (minutes)	**770**

RESULTS

Average emission rate:(gr/hr)	**1.492**
Burn Rate (Dry kg/hr):	1.488

PRESSURE FACTOR		0.99265
TEMPERATURE FACTORS		
	DGM #1:	0.96545
	DGM #2:	0.97220
VOLUMES SAMPLED		
	DGM #1:	65.90085
	DGM #2:	70.65781
TOTAL TUNNEL VOLUME (scf):		303865
SAMPLE RATIOS		
Sample Train 1:		4610.936
Sample Train 2:		4300.510
TOTAL EMISSIONS		
Sample Train 1 (g):		**19.37**
Sample Train 2 (g):		**18.92**
EMISSION RATES		
Sample Train 1 (g/hr):		**1.51**
Sample Train 2 (g/hr):		**1.47**
	MAX Allowed	7.50%
DEVIATION:		1.16%

BAROMETRIC PRESSURE

Average:	29.7
Start:	29.6
End:	29.8

DRY GAS METER VALUES

DGM #1	Final:	1019.206
	Initial:	950.851
DGM #2	Final:	1186.537
	Initial:	1113.539

TEMPERATURES (DEG. RANKIN)

DGM #1:	546.898
DGM #2:	543.101

CALIBRATION FACTORS

DGM #1:	1.0060
DGM #2:	1.0030

TUNNEL FLOW RATE:	394.629

PARTICULATE CATCH (mg)

Total Sample Train 1:	4.2
Total Sample Train 2:	4.4
Filter and seal Sample Train 1:	3.7
Filter and seal Sample Train 2:	3.2
Probe Sample Train 1:	0.5
Probe Sample Train 2:	1.2

Manufacturer:	SBI	**Eng:**	Claude Pelland																					
Model:	HE350 Series (FP-15)																							
Date:	2016-06-09																							
Run:	2																							
Control #:	QC20160208																							
Rated Capacity	-	BTU/HR																						
Test Duration:	**60**																							
Output Category:	1	Start	End																					
	Barometer (in.Hg):	29.6	29.8																					
	Dry Bulb (F):																							
	Humidity (%):	74	91																					
Average Stove Temperature:		0.00																						
Moisture content of wood (wet basis):		19.92																						
	Average	0.00	0.00	0.00	681.59	79.96	150.92	#DIV/0!	0.00	0.00	0.00	0.00	0.00	0.00		83.16	83.67	83.74					0.1386	0.08
*	*	*	*	*	*1	*2	*3	*4							*	*	*	*					*	*
Elapsed	Weight				Flue	Room	Tunnel	Outlet	door	ash door	left side	back	right side	front	DGM 3	DGM 3	DGM 3	Filter 3					Tunnel	
Time	Remaining	CO	CO_2	O_2	Gas	Temp	Dry Bulb	air							Reading	Inlet T	Outlet T	Temp					Velocity	Draft
0.00	51.8	0.00	0.00	0.00	233.27	76.85	90.85		0.00	0.00	0.00	0.00	0.00	0.00	548.905	78.07	77.87	84.61					0.137	0.035
10.00	47.9	0.00	0.00	0.00	704.64	77.22	159.95		0.00	0.00	0.00	0.00	0.00	0.00	550.300	81.20	80.98	84.05					0.138	0.080
20.00	42.4	0.00	0.00	0.00	780.60	79.00	161.95		0.00	0.00	0.00	0.00	0.00	0.00	551.745	82.24	82.77	82.15					0.143	0.085
30.00	37.5	0.00	0.00	0.00	764.48	80.45	160.90		0.00	0.00	0.00	0.00	0.00	0.00	553.143	83.83	84.73	82.80					0.136	0.084
40.00	32.5	0.00	0.00	0.00	761.97	81.25	160.88		0.00	0.00	0.00	0.00	0.00	0.00	554.555	85.06	85.94	86.59					0.140	0.084
50.00	27.9	0.00	0.00	0.00	761.76	82.21	161.66		0.00	0.00	0.00	0.00	0.00	0.00	555.963	85.57	86.51	82.30					0.139	0.084
60.00	23.7	0.00	0.00	0.00	764.42	82.76	160.24		0.00	0.00	0.00	0.00	0.00	0.00	557.308	86.14	86.87	83.69					0.137	0.084

																(ASTM E2515 Formula)						
			Manufacturer:		SBI																	
			Model:		HE350 Series (FP-15)							Stack area (ft2):		0.349066		Manufacturer:		SBI				
			Date:		6-9-16							Wood moisture (% wet):		19.92		Model:		HE350 Series (FP-15)				
			Run:		2							Load Weight (lbs wet):		51.83		Date:		6-9-16				
			Project #:		QC20160208							Burn Rate (Dry kg/hr):		18.827		Run:		2				
					-																	
			Test Duration:		60																	
			Total Gas Volume (DGM 3):		7.983							Final Temperature (DGM #3) Degrees Rankin:				543.411						
			Average Barometric Pressure:		29.7							Final Tunnel Temperature Degrees Rankin:				610.918						
			Molecular Weight:		28.78							Final Tunnel Velocity (feet per second):				21.672						
			Pitot Correction:		0.958677							Standardized Tunnel Flow (dscfm):				381.460801						
			Calibration Factor (DGM #3):		0.9870																	
														Average								
				(3) VS:	0.266617									Inlet +								
								Filter						Outlet		Average		#3				Average
								Face		Delta-P	Tunnel	Temp.		**100.4**		dDGM					**0.37**
Elapsed	DGM 3	DGM 3	DGM 3				Tunnel	Velocity		(in. H2O)	Velocity	Meter 3		**Proportional Rates**		Vol.Std.					SQRT
Time	Reading	Inlet T	Outlet T				Dry Bulb	DGM 3		Tunnel	Ft/Sec	Deg. R		**PR1**		(ft3)				Time	Delta-P
0.00	548.91	78.07	77.87				90.848			0.137	20.497	538.0								0	0.370788
10.00	550.30	81.20	80.98				159.95	7.13		0.138	21.768	541.1		101.46		1.333				10	0.371191
20.00	551.75	82.24	82.77				161.95	7.37		0.143	22.199	542.5		102.85		1.377				20	0.377927
30.00	553.14	83.83	84.73				160.9	7.10		0.136	21.639	544.3		101.24		1.328				30	0.368701
40.00	554.56	85.06	85.94				160.88	7.16		0.140	21.998	545.5		100.13		1.338				40	0.374833
50.00	555.96	85.57	86.51				161.66	7.13		0.139	21.860	546.0		100.41		1.333				50	0.372243
60.00	557.31	86.14	86.87				160.24	6.81		0.137	21.740	546.5		96.06		1.273				60	0.370622

Intertek Testing Services

Manufacturer:	**SBI**
Model:	**HE350 Series (FP-15)**
Date:	**6-9-16**
Run:	**2**
Project #:	**QC20160208**
Test Duration: (minutes)	**60**

RESULTS

Average emission rate:(gr/hr) **11.4**

Burn Rate (Dry kg/hr): N/A

PRESSURE FACTOR 0.99265

BAROMETRIC PRESSURE

Average:	29.7
Start:	29.6
End:	29.8

TEMPERATURE FACTORS

DGM #3: 0.97164

DRY GAS METER VALUES

DGM #3	Final:	557.308
	Initial:	548.905

VOLUMES SAMPLED

DGM #3: 7.99929

TOTAL TUNNEL VOLUME (scf): 22888

SAMPLE RATIOS

Sample Train 3: 2861.209

TEMPERATURES (DEG. RANKIN)

DGM #3: 543.411

TOTAL EMISSIONS

Sample Train 3 (g): **11.44**

CALIBRATION FACTORS

DGM #3: 0.9870

EMISSION RATES

Sample Train 3 (g/hr): **11.44**

TUNNEL FLOW RATE: 381.461

PARTICULATE CATCH (mg)

Total Sample Train 3:	4
Filter and seal Sample Train 3:	3.8
Probe Sample Train 3:	0.2

	Train 3	
Cs	0.00050004	
Cr	0	
Et	11.44	
Et	AVERAGE	Grams Emissions

Room Particulate Correction

Mr	0	Milligram Catch (mg)
Vmr	7.7544	Total Volume Sampled (dscf)

Rotometer (glass) at 100 flow rate is 0.12924 cfm

For Usable Firebox Volumes above 3.0 ft^3 - Low and Medium Fire						
Nominal Required Load Density (wet basis)	12	lb/ft^3				
Usable Firebox Volume	4.28	ft^3				
Total Nom. Load Wt. Target	51.312	lb				
Total Load Wt. Allowable Range	48.75	to	53.88	lb		
Core Target Wt. Allowable Range	23.09	to	33.35	lb		
Remainder Load Wt. Allowable Range	17.96	to	28.22	lb		
						Mid-Point
Core Load Fuel Pc. Wt. Allowable Range	7.70	to	12.83	lb		10.26
Remainder Load Pc. Wt. Allowable Range	5.13	to	10.26	lb		7.70
	Pc. #					
Core Load Piece Wt. Actual	1	8.41	lb		In Range	
	2	8.55	lb		In Range	
	3	8.02	lb		In Range	
Core Load Total. Wt. Actual		24.97	lb		In Range	
	Pc. #					
Remainder Load Piece Wt.	1	5.13	lb		In Range	
(3 or 4 Pcs.)	2	5.80	lb		In Range	
	3	8.78	lb		In Range	
	4	6.70	lb		In Range	
Remainder Load Piece Weight Ratio - Small/Large		58%			In Range	≤ 67%
Remainder Load Tot. Wt. Act		26.41	lb		In Range	
Total Load Wt. Actual		51.38	lb		In Range	
Core % of Total Wt.		49%			In Range	45-65%
Remainder % of Total Wt.		51%			In Range	35-55%
Actual Load % of Nominal Target		100%			In Range	95-105%
Actual Fuel Load Density		12.0	lb/ft^3			
Allowable Charcoal Bed Wt. Range (lb)	5.2	to	10.2			Mid-Point
Actual Charcoal Bed Wt.		8.104	lb		In Range	7.7
Actual Fuel Load Ending Wt.		0.0	lb		Valid Test	≥ 90%
Total Wt. of Fuel Burned During Test Run lb.		51.4	lb			

Fuel Piece Moisture Reading (%-dry basis)								
1	2	3	Ave.		Pc. Wt. Dry Basis			
26.8	18.2	22.3	22.4	In Range	6.87	lb	3.11	kg
24	23.5	25.3	24.3	In Range	6.88	lb	3.12	kg
23.5	26	22.8	24.1	In Range	6.46	lb	2.93	kg
24.7	21.4	21.8	22.6	In Range	4.19	lb	1.90	kg
24.3	21	27.6	24.3	In Range	4.67	lb	2.12	kg
21.6	21.7	20	21.1	In Range	7.25	lb	3.29	kg
28.4	24.2	23.5	25.4	In Range	5.34	lb	2.42	kg
Total Load Ave. MC % (dry basis)			23.4	In Range				
Total Load Ave. MC % (wet basis)			18.9					
Total Test Load Weight (dry basis) →					41.65	lb	18.89	kg
Total Fuel Weight Burned During Test Run (dry basis)					41.7	lb	18.89	kg

Intertek

TEST FUEL DATA
EPA METHOD 5G-3

Project Number:	G102163747
Manufacturer:	SBI
Model:	HE350 Series
Sample ID Number:	QC20160608
Test Date:	10-Jun-16
Test Run Number:	3

Calibration Reference ID	SBI-153	
Set meter to Species 1		
Set Temperature to 70F	12%	12.0
Set pin setting to 444	22%	22.0

PRE-BURN FUEL PROPERTIES

Eq. ID No.:		Time:		Temp.,°F:	
Piece No.	Length, In.	Weight, Lb.	Moisture, %, Dry Basis		
1					
2					
3					
4					
5					
6					
7					
8					
9					
10					
11					
12					
Total Weight		0.0	Average, %db		#DIV/0!

Allowable Fuel Load Range: **27** to **32.9**

TEST FUEL LOAD PROPERTIES

Eq. ID No.:	SBI-229		Time:	05:26	Temp.,°F:	75.5
Piece No.	Length, In.	Weight, Lb. 2x4	Weight, Lb. 4x4	Moisture, %, Dry Basis		
1	16 1/2	8.780	-	21.6	21.7	20.0
2	16 3/4	~~16 1/2~~	-	23.5	26.0	22.8
3	16 3/4	8.546	-	24.0	23.5	25.3
4	17	8.406	-	26.8	18.2	22.3
5	16 1/4	6.695	-	28.4	24.2	23.5
6	16 1/2	5.134	-	24.7	21.4	21.8
7	16 1/4	5.801	-	24.3	21.0	27.6
8				-	-	-
Totals		0.0	0.0			
% of Weight		#DIV/0!	#DIV/0!			
Total weight, wet, lb.		0.00		Average Moisture, dry		#DIV/0!
Total weight, dry, kg		#DIV/0!		Average Moisture, wet		#DIV/0!

8.021

Test Engineer: _____ Date: 10-Jun-2016

Intertek

TEST FUEL DATA
EPA METHOD 5G-3

Project Number:	G102163747
Manufacturer:	SBI
Model:	HE350 Series
Sample ID Number:	QC20160608
Test Date:	10-Jun-16
Test Run Number:	3

Calibration Reference ID	SBI-153	
Set meter to Species 1		
Set Temperature to 70F	12%	12.0
Set pin setting to 444	22%	22.0

PRE-BURN FUEL PROPERTIES

Eq. ID No.:	SBI-214	Time:	2:10	Temp.,°F:	75
Piece No.	Length, In.	Weight, Lb.	Moisture, %, Dry Basis		
Kindling 1	16	8.275	10		
2					
3					
4					
5					
Start-up fuel 6	16 1/2	12.187	21.2	18.1	18.3
7	16 1/2		26.7	28.0	21.8
8					
9					
10					
11					
12					
Total Weight		0.0	Average, %db		#DIV/0!

Allowable Fuel Load Range: **27** to **32.9**

TEST FUEL LOAD PROPERTIES

Eq. ID No.:	SBI-229		Time:		Temp.,°F:	
Piece No.	Length, In.	Weight, Lb. 2x4	Weight, Lb. 4x4	Moisture, %, Dry Basis		
1	17		6.401	26.1	26.4	22.3
2	16 1/2		4.817	18.6	19.2	25.7
3	17 1/2		8.683	21.9	22.7	24.5
4	16 1/2		6.031	18.5	21.8	24.2
5	17 3/4		6.980	21.3	24.8	23.4
6	17 1/4		8.796	20.4	22.4	26.5
7						
8						
Totals		0.0	0.0			
% of Weight		#DIV/0!	#DIV/0!			
Total weight, wet, lb.		0.00		Average Moisture, dry		#DIV/0!
Total weight, dry, kg		#DIV/0!		Average Moisture, wet		#DIV/0!

Test Engineer: _____ Date: 10-Jun-2016

Intertek

Dillution Tunnel Velocity Traverse
EPA Method 5G-3

Project Number: G102163747
Manufacturer: SBI
Model: HE350 Series
Sample ID Number: QC20160608
Test Date: 10-Jun-16
Test Run Number: 3

	Dilution Tunnel		
	Delta P In. H2O	Temp,°F	Square Root
A1	0.116	97.3	0.0000
A2	0.126	97.7	0.0000
A3	0.118	97.6	0.0000
A4	0.120	94.2	0.0000
A Center	0.128	97.4	0.0000
B1	0.100	98.3	0.0000
B2	0.131	98.5	0.0000
B3	0.125	98.9	0.0000
B4	0.110	96.9	0.0000
B Center	0.133	99.3	0.0000
Averages	#DIV/0!	#DIV/0!	0.0000

Tunnel Diameter	8.000	inches
Tunnel Static	0.193	in. H2O
Tunnel Area	0.34907	Ft2
Pitot Correction	#DIV/0!	factor
Baro. Pressure	29.50	
Pitot Factor	0.84	(0.99 for standard, 0.84 or Cal. For S-Type)
Initial Velocity	#DIV/0!	Ft/ Sec
Initial Flow	**#DIV/0!**	Ft3/min

Test Engineer: _____

Date: 10-Jun 2016

Time	Ambiant	Flue	Firebox Top	Dilution Tunnel	Firebox Right	Firebox Back	Firebox Bottom	Firebox Left	DGM Outlet 1
min	°F	°F	°F	°F	°F	°F	°F	°F	°F
0	79.08	703.75	145.52	820.39	587.93	546.24	588.21	475.21	N/A
1	79.38	679.13	141.06	814.23	589.59	545.63	588.52	477.14	N/A
2	79.40	662.32	138.50	806.53	591.18	544.82	589.14	478.53	N/A
3	79.88	646.86	136.12	795.55	592.63	543.86	588.75	479.85	N/A
4	80.04	631.58	134.39	781.41	594.05	542.45	587.88	481.02	N/A
5	79.41	618.24	132.99	767.16	595.17	541.38	587.44	482.32	N/A
6	79.16	606.93	131.74	752.25	596.14	539.83	586.20	483.29	N/A
7	79.44	598.06	130.99	740.94	596.93	538.45	584.70	485.54	N/A
8	79.00	588.98	129.98	730.37	597.50	537.15	582.99	487.52	N/A
9	78.92	579.79	128.73	719.34	597.87	535.37	580.84	489.28	N/A
10	78.70	571.05	128.07	708.42	598.06	533.89	578.74	491.28	N/A
11	78.40	561.69	127.24	697.65	598.10	531.82	576.43	493.04	N/A
12	77.96	552.50	126.46	684.10	597.96	529.43	573.82	495.83	N/A
13	78.00	545.17	125.60	671.07	597.73	527.58	571.35	498.53	N/A
14	78.15	538.61	124.88	659.39	597.40	525.07	569.09	500.12	N/A
15	78.09	531.81	123.97	649.32	597.02	522.42	566.94	501.23	N/A
16	77.95	526.25	123.59	639.86	596.58	519.62	564.50	502.72	N/A
17	78.00	519.78	122.36	630.08	596.11	516.72	562.12	502.66	N/A
18	77.96	512.82	121.58	618.96	595.58	513.50	559.46	503.18	N/A
19	77.87	506.56	121.04	609.25	595.00	510.36	557.31	502.55	N/A
20	78.12	500.26	120.28	599.35	594.28	506.95	554.62	502.14	N/A
21	77.83	495.05	119.67	591.36	593.48	503.90	552.00	501.84	N/A
22	77.42	489.73	119.07	585.20	592.58	501.30	549.96	501.06	N/A
23	77.86	485.04	118.52	580.15	591.58	498.03	547.60	500.65	N/A
24	77.61	481.10	118.09	575.05	590.48	495.47	545.16	500.13	N/A
25	77.52	476.71	117.36	568.57	589.29	492.41	542.62	499.24	N/A
26	77.45	470.26	116.68	560.08	588.02	489.25	540.35	498.69	N/A
27	78.08	463.69	115.96	551.30	586.73	486.51	537.64	497.58	N/A
28	78.36	457.27	115.35	543.12	585.37	483.76	535.08	496.99	N/A
29	78.39	451.45	114.69	535.20	583.81	480.84	532.43	496.13	N/A
30	78.23	446.07	113.95	528.27	582.25	478.48	529.76	495.59	N/A
31	78.00	441.84	113.41	522.18	580.59	475.37	526.80	494.90	N/A

32	77.85	437.56	112.88	516.63	578.84	473.22	524.23	494.06	N/A
33	77.33	433.18	112.58	511.23	577.00	470.13	521.33	493.01	N/A
34	77.03	429.04	112.09	505.65	575.10	467.41	518.23	491.96	N/A
35	77.16	424.99	111.62	500.22	573.11	465.01	515.94	491.08	N/A
36	77.14	420.66	111.16	495.00	571.07	462.56	513.31	490.37	N/A
37	77.08	417.11	110.71	489.75	568.86	459.45	510.45	489.41	N/A
38	76.99	413.76	110.26	485.14	566.74	456.96	507.82	488.88	N/A
39	77.39	402.09	125.71	471.97	565.99	454.91	505.05	489.24	N/A
40	77.72	404.30	113.48	471.58	563.86	452.74	502.78	490.64	N/A
41	77.45	402.51	111.09	470.67	561.62	450.75	500.60	491.40	N/A
42	76.84	400.98	110.16	470.18	559.39	448.76	498.04	491.92	N/A
43	76.69	398.68	109.41	468.82	557.13	446.32	495.53	492.02	N/A
44	76.36	395.49	108.66	465.44	554.90	444.48	492.78	491.33	N/A
45	77.40	389.73	108.28	459.04	552.62	442.54	489.90	490.46	N/A
46	77.15	385.53	107.56	452.45	550.11	440.09	486.69	489.03	N/A
47	77.10	381.34	106.84	446.71	547.72	438.36	484.26	487.60	N/A
48	77.03	377.74	106.47	441.37	545.25	435.72	481.34	485.72	N/A
49	76.70	374.31	106.05	436.44	542.73	434.15	478.14	483.52	N/A
50	76.59	371.00	105.76	431.55	540.16	432.11	475.50	481.83	N/A
51	76.71	367.48	105.29	427.06	537.55	430.01	472.62	481.11	N/A
52	76.63	364.89	104.87	422.82	534.93	427.69	469.49	479.83	N/A
53	76.53	362.05	104.65	418.56	532.32	425.32	466.64	478.36	N/A
54	76.64	358.77	104.21	414.28	529.45	422.95	463.34	475.61	N/A
55	76.51	356.26	104.02	410.56	526.80	420.91	460.24	474.37	N/A
56	76.37	353.78	103.73	406.85	524.16	418.95	456.75	473.08	N/A
57	76.47	351.15	103.33	403.34	521.51	416.73	454.12	471.66	N/A
58	76.18	348.82	103.12	400.06	518.85	414.82	451.15	469.87	N/A
59	76.26	346.93	102.87	396.84	516.20	412.60	448.31	468.07	N/A
60	76.24	344.13	102.48	393.51	513.54	410.94	445.43	466.14	N/A
61	76.75	337.98	111.91	385.03	511.73	408.40	442.09	465.07	N/A
62	77.11	338.55	104.49	382.78	509.12	406.08	439.53	463.93	N/A
63	76.28	336.91	102.91	380.40	506.28	403.59	436.65	461.23	N/A
64	76.30	335.04	102.08	378.15	503.72	401.65	434.07	459.23	N/A
65	76.13	333.22	101.59	375.65	501.21	399.51	431.30	456.60	N/A

66	75.87	331.31	101.16	372.92	498.73	397.52	428.40	454.86	N/A
67	75.98	329.11	100.98	370.22	496.31	395.76	425.86	453.26	N/A
68	76.00	326.99	100.71	367.59	493.90	393.78	423.05	452.03	N/A
69	76.12	325.07	100.39	364.95	491.53	392.22	421.02	450.41	N/A
70	76.17	323.31	100.27	362.16	489.19	390.56	418.72	448.68	N/A
71	76.03	321.69	100.03	359.27	486.70	388.34	416.17	447.05	N/A
72	75.79	319.62	99.93	356.83	484.39	386.78	413.99	444.74	N/A
73	75.66	317.79	99.82	354.16	482.15	384.55	411.71	443.66	N/A
74	75.83	315.94	99.40	351.93	479.95	382.51	409.41	441.52	N/A
75	75.72	314.03	99.32	349.47	477.75	380.85	407.17	440.01	N/A
76	76.08	312.24	98.50	347.04	475.60	379.08	405.41	438.63	N/A
77	76.37	310.64	96.23	344.78	473.47	377.33	403.46	437.36	N/A
78	75.99	308.68	98.40	342.58	471.34	375.70	401.40	434.75	N/A
79	75.92	306.69	98.47	340.26	469.07	374.20	399.19	432.89	N/A
80	75.90	305.34	98.30	337.97	467.01	372.67	396.90	430.66	N/A
81	76.10	303.56	98.19	335.77	464.96	370.99	394.75	428.75	N/A
82	75.71	302.23	97.61	333.58	462.92	369.28	392.69	427.26	N/A
83	75.76	300.76	97.65	331.45	460.87	367.55	390.77	425.52	N/A
84	75.89	299.15	96.56	329.36	458.85	366.16	388.76	424.14	N/A
85	75.87	297.22	97.19	327.59	456.83	364.19	386.69	422.45	N/A
86	75.77	295.66	97.10	325.60	454.86	362.53	384.58	420.31	N/A
87	75.77	294.27	97.00	323.59	452.90	360.49	382.37	417.99	N/A

DGM Inlet 1	Probe 1	DGM Outlet 2	DGM Inlet 2	Probe 2	Probe 3	Draft	Dilution Tunnel	Scale
°F	°F	°F	°F	°F	°F	"H_2O	"H_2O	lb
N/A	N/A	N/A	N/A	N/A	N/A	0.077	0.125	11.75
N/A	N/A	N/A	N/A	N/A	N/A	0.076	0.127	11.58
N/A	N/A	N/A	N/A	N/A	N/A	0.075	0.128	11.41
N/A	N/A	N/A	N/A	N/A	N/A	0.074	0.126	11.27
N/A	N/A	N/A	N/A	N/A	N/A	0.073	0.128	11.13
N/A	N/A	N/A	N/A	N/A	N/A	0.073	0.128	11.01
N/A	N/A	N/A	N/A	N/A	N/A	0.072	0.127	10.88
N/A	N/A	N/A	N/A	N/A	N/A	0.071	0.126	10.76
N/A	N/A	N/A	N/A	N/A	N/A	0.070	0.126	10.63
N/A	N/A	N/A	N/A	N/A	N/A	0.070	0.125	10.52
N/A	N/A	N/A	N/A	N/A	N/A	0.069	0.129	10.41
N/A	N/A	N/A	N/A	N/A	N/A	0.069	0.129	10.30
N/A	N/A	N/A	N/A	N/A	N/A	0.068	0.126	10.19
N/A	N/A	N/A	N/A	N/A	N/A	0.067	0.127	10.09
N/A	N/A	N/A	N/A	N/A	N/A	0.067	0.127	10.00
N/A	N/A	N/A	N/A	N/A	N/A	0.066	0.129	9.92
N/A	N/A	N/A	N/A	N/A	N/A	0.066	0.127	9.82
N/A	N/A	N/A	N/A	N/A	N/A	0.065	0.130	9.74
N/A	N/A	N/A	N/A	N/A	N/A	0.065	0.127	9.68
N/A	N/A	N/A	N/A	N/A	N/A	0.064	0.130	9.59
N/A	N/A	N/A	N/A	N/A	N/A	0.064	0.129	9.53
N/A	N/A	N/A	N/A	N/A	N/A	0.063	0.128	9.48
N/A	N/A	N/A	N/A	N/A	N/A	0.063	0.129	9.39
N/A	N/A	N/A	N/A	N/A	N/A	0.062	0.129	9.34
N/A	N/A	N/A	N/A	N/A	N/A	0.062	0.128	9.28
N/A	N/A	N/A	N/A	N/A	N/A	0.061	0.129	9.23
N/A	N/A	N/A	N/A	N/A	N/A	0.061	0.129	9.18
N/A	N/A	N/A	N/A	N/A	N/A	0.060	0.128	9.15
N/A	N/A	N/A	N/A	N/A	N/A	0.060	0.129	9.13
N/A	N/A	N/A	N/A	N/A	N/A	0.059	0.131	9.09
N/A	N/A	N/A	N/A	N/A	N/A	0.059	0.132	9.05
N/A	N/A	N/A	N/A	N/A	N/A	0.059	0.129	9.02

N/A	N/A	N/A	N/A	N/A	N/A	0.058	0.130	8.99
N/A	N/A	N/A	N/A	N/A	N/A	0.058	0.130	8.94
N/A	N/A	N/A	N/A	N/A	N/A	0.057	0.131	8.91
N/A	N/A	N/A	N/A	N/A	N/A	0.057	0.131	8.88
N/A	N/A	N/A	N/A	N/A	N/A	0.056	0.132	8.84
N/A	N/A	N/A	N/A	N/A	N/A	0.056	0.131	8.80
N/A	N/A	N/A	N/A	N/A	N/A	0.055	0.130	8.78
N/A	N/A	N/A	N/A	N/A	N/A	0.056	0.132	8.73
N/A	N/A	N/A	N/A	N/A	N/A	0.055	0.129	8.69
N/A	N/A	N/A	N/A	N/A	N/A	0.055	0.132	8.66
N/A	N/A	N/A	N/A	N/A	N/A	0.055	0.132	8.64
N/A	N/A	N/A	N/A	N/A	N/A	0.055	0.129	8.61
N/A	N/A	N/A	N/A	N/A	N/A	0.054	0.131	8.60
N/A	N/A	N/A	N/A	N/A	N/A	0.054	0.131	8.58
N/A	N/A	N/A	N/A	N/A	N/A	0.053	0.130	8.56
N/A	N/A	N/A	N/A	N/A	N/A	0.053	0.131	8.55
N/A	N/A	N/A	N/A	N/A	N/A	0.052	0.129	8.55
N/A	N/A	N/A	N/A	N/A	N/A	0.052	0.131	8.54
N/A	N/A	N/A	N/A	N/A	N/A	0.052	0.132	8.53
N/A	N/A	N/A	N/A	N/A	N/A	0.051	0.130	8.52
N/A	N/A	N/A	N/A	N/A	N/A	0.051	0.131	8.51
N/A	N/A	N/A	N/A	N/A	N/A	0.051	0.131	8.49
N/A	N/A	N/A	N/A	N/A	N/A	0.051	0.129	8.48
N/A	N/A	N/A	N/A	N/A	N/A	0.050	0.130	8.47
N/A	N/A	N/A	N/A	N/A	N/A	0.050	0.131	8.45
N/A	N/A	N/A	N/A	N/A	N/A	0.049	0.131	8.45
N/A	N/A	N/A	N/A	N/A	N/A	0.049	0.132	8.43
N/A	N/A	N/A	N/A	N/A	N/A	0.049	0.130	8.40
N/A	N/A	N/A	N/A	N/A	N/A	0.049	0.130	8.39
N/A	N/A	N/A	N/A	N/A	N/A	0.049	0.129	8.37
N/A	N/A	N/A	N/A	N/A	N/A	0.049	0.131	8.33
N/A	N/A	N/A	N/A	N/A	N/A	0.048	0.132	8.31
N/A	N/A	N/A	N/A	N/A	N/A	0.048	0.133	8.30
N/A	N/A	N/A	N/A	N/A	N/A	0.047	0.132	8.29

N/A	N/A	N/A	N/A	N/A	N/A	0.047	0.132	8.28
N/A	N/A	N/A	N/A	N/A	N/A	0.047	0.132	8.27
N/A	N/A	N/A	N/A	N/A	N/A	0.047	0.131	8.25
N/A	N/A	N/A	N/A	N/A	N/A	0.047	0.131	8.23
N/A	N/A	N/A	N/A	N/A	N/A	0.046	0.130	8.22
N/A	N/A	N/A	N/A	N/A	N/A	0.046	0.133	8.22
N/A	N/A	N/A	N/A	N/A	N/A	0.046	0.134	8.20
N/A	N/A	N/A	N/A	N/A	N/A	0.045	0.134	8.19
N/A	N/A	N/A	N/A	N/A	N/A	0.045	0.135	8.18
N/A	N/A	N/A	N/A	N/A	N/A	0.046	0.134	8.17
N/A	N/A	N/A	N/A	N/A	N/A	0.045	0.129	8.17
N/A	N/A	N/A	N/A	N/A	N/A	0.045	0.104	8.16
N/A	N/A	N/A	N/A	N/A	N/A	0.045	0.132	8.14
N/A	N/A	N/A	N/A	N/A	N/A	0.045	0.130	8.13
N/A	N/A	N/A	N/A	N/A	N/A	0.045	0.131	8.13
N/A	N/A	N/A	N/A	N/A	N/A	0.044	0.135	8.11
N/A	N/A	N/A	N/A	N/A	N/A	0.044	0.128	8.10
N/A	N/A	N/A	N/A	N/A	N/A	0.044	0.117	8.11
N/A	N/A	N/A	N/A	N/A	N/A	0.044	0.130	8.11
N/A	N/A	N/A	N/A	N/A	N/A	0.044	0.132	8.10
N/A	N/A	N/A	N/A	N/A	N/A	0.044	0.131	8.10
N/A	N/A	N/A	N/A	N/A	N/A	0.044	0.130	8.10

Date/heure	Time	O_2	CO	CO_2IR	CO
YYYY-MM-DD HH:MM:SS	min	%	ppm CO	%	%
2016-06-10 05:51:49	0	15.53	*3534*	3.75	0.35
2016-06-10 06:01:49	10	6.89	*12742*	13.67	1.27
2016-06-10 06:11:49	20	6.98	*9090*	13.76	0.91
2016-06-10 06:21:49	30	6.12	*16598*	14.61	1.66
2016-06-10 06:31:49	40	6.24	*10126*	14.74	1.01
2016-06-10 06:41:49	50	10.15	*6293*	11.15	0.63
2016-06-10 06:51:49	60	10.08	*4962*	11.05	0.50
2016-06-10 07:01:49	70	9.70	*5157*	11.38	0.52
2016-06-10 07:11:49	80	9.73	*4254*	11.42	0.43
2016-06-10 07:21:49	90	9.46	*4373*	11.59	0.44
2016-06-10 07:31:49	100	9.46	*4637*	11.48	0.46
2016-06-10 07:41:49	110	9.52	*3641*	11.11	0.36
2016-06-10 07:51:49	120	10.66	*2324*	10.16	0.23
2016-06-10 08:01:49	130	11.24	*2154*	9.35	0.22
2016-06-10 08:11:49	140	11.41	*3037*	8.94	0.30
2016-06-10 08:21:49	150	12.86	*1470*	7.36	0.15
2016-06-10 08:31:49	160	13.70	*2865*	6.46	0.29
2016-06-10 08:41:49	170	14.58	*3484*	5.84	0.27
2016-06-10 08:51:49	180	14.88	*4045*	5.38	0.40
2016-06-10 09:01:49	490	15.33	*4398*	4.91	0.44
2016-06-10 09:11:49	200	15.47	*4587*	4.81	0.46
2016-06-10 09:21:49	210	15.53	*4186*	4.72	0.42
2016-06-10 09:31:49	220	15.59	*4281*	4.70	0.43
2016-06-10 09:41:49	230	15.61	*4304*	4.65	0.43
2016-06-10 09:51:49	240	15.98	*4571*	4.36	0.46
2016-06-10 10:01:49	250	16.10	*4146*	4.22	0.41
2016-06-10 10:11:49	260	16.20	*3977*	4.13	0.40
2016-06-10 10:21:49	270	16.15	*4136*	4.09	0.41
2016-06-10 10:31:49	280	16.23	*4067*	4.03	0.41
2016-06-10 10:41:49	290	16.33	*3717*	3.97	0.37
2016-06-10 10:51:49	300	16.48	*3572*	3.82	0.36
2016-06-10 11:01:49	310	16.53	*3485*	3.81	0.35
2016-06-10 11:11:49	320	16.71	*3777*	3.60	0.38
2016-06-10 11:21:49	330	16.77	*3596*	3.57	0.36
2016-06-10 11:31:49	340	16.81	*3661*	3.52	0.37
2016-06-10 11:41:49	350	16.89	*3576*	3.50	0.36
2016-06-10 11:51:49	360	16.98	*3340*	3.39	0.33
2016-06-10 12:01:49	370	17.01	*3414*	3.37	0.34
2016-06-10 12:11:49	380	17.07	*3291*	3.30	0.33
2016-06-10 12:21:49	390	17.18	*3120*	3.20	0.31
2016-06-10 12:31:49	400	17.27	*3095*	3.15	0.31
2016-06-10 12:41:49	410	17.40	*2960*	3.00	0.30
2016-06-10 12:51:49	420	17.51	*2945*	2.91	0.29
2016-06-10 13:01:49	430	17.58	*2855*	2.85	0.29
2016-06-10 13:11:49	440	17.66	*2773*	2.77	0.28
2016-06-10 13:21:49	450	17.69	*2759*	2.74	0.28
2016-06-10 13:31:49	460	17.78	*2736*	2.68	0.27
2016-06-10 13:41:49	470	17.80	*2703*	2.63	0.27
2016-06-10 13:51:49	480	17.83	*2604*	2.62	0.26
2016-06-10 14:01:49	490	17.83	*2606*	2.61	0.26
2016-06-10 14:11:49	500	17.91	*2651*	2.62	0.27
2016-06-10 14:21:49	510	18.07	*2526*	2.49	0.25
2016-06-10 14:31:49	520	18.09	*2516*	2.47	0.25

2016-06-10 14:41:49	530	18.17	*2388*	2.40	0.24
2016-06-10 14:51:49	540	18.22	*2326*	2.37	0.23
2016-06-10 15:01:49	550	18.25	*2269*	2.34	0.23
2016-06-10 15:11:49	560	18.33	*2179*	2.26	0.22
2016-06-10 15:21:49	570	18.33	*2134*	2.28	0.21
2016-06-10 15:31:49	580	18.29	*2146*	2.29	0.21
2016-06-10 15:41:49	590	18.36	*2050*	2.26	0.21
2016-06-10 15:51:49	600	18.49	*4977*	2.15	0.50
2016-06-10 16:01:49	610	18.51	*2100*	2.08	0.21
2016-06-10 16:11:49	620	18.65	*4967*	1.99	0.50
2016-06-10 16:21:49	630	18.79	*1850*	1.88	0.19
2016-06-10 16:31:49	640	18.93	*1720*	1.76	0.17
2016-06-10 16:41:49	650	49.00	*1652*	1.69	0.17
2016-06-10 16:51:49	660	17.49	*3363*	1.70	0.34
2016-06-10 17:01:49	670	17.00	*3788*	3.28	0.38
2016-06-10 17:11:49	680	17.28	*3486*	3.06	0.35

Time	Ambiant	Flue	Dilution Tunnel	Firebox Top	Firebox Right	Firebox Back	Firebox Bottom	Firebox Left
min	°F	°F	°F	°F	°F	°F	°F	°F
0	75.55	293.57	96.88	322.47	451.76	359.63	381.26	417.24
10	75.85	695.19	159.75	702.34	440.74	360.52	368.61	401.41
20	76.73	760.15	151.68	858.52	431.54	408.33	406.23	381.98
30	77.54	802.03	159.35	859.81	436.24	448.28	440.20	363.71
40	78.43	820.43	161.86	849.71	442.85	477.37	465.40	353.40
50	79.31	697.72	136.37	832.61	449.44	497.70	484.59	348.82
60	79.07	615.18	128.88	763.96	444.99	486.77	468.79	354.34
70	78.19	597.92	126.74	776.37	438.11	474.50	449.32	359.41
80	78.11	599.25	125.72	810.26	437.00	468.57	438.27	361.77
90	79.37	595.20	125.76	805.36	440.09	463.54	432.84	359.60
100	78.40	590.86	124.83	804.09	445.61	460.61	430.42	352.33
110	79.55	574.90	121.41	787.59	453.31	459.87	429.15	347.13
120	80.02	564.82	121.02	763.36	461.18	459.27	427.94	341.59
130	79.31	540.72	117.37	714.29	468.48	451.02	427.76	338.40
140	76.83	521.23	113.94	654.00	474.56	439.77	429.24	335.27
150	79.76	497.34	113.99	615.78	480.09	430.96	430.32	333.56
160	79.08	457.95	110.53	558.97	479.44	422.36	426.17	334.42
170	77.63	423.21	106.18	506.20	472.78	413.12	420.80	334.52
180	73.92	401.32	102.07	460.22	463.78	405.26	413.96	335.24
190	73.11	369.47	98.64	421.54	452.30	396.24	405.32	334.80
200	71.91	348.62	96.13	396.79	441.70	385.30	395.94	333.69
210	72.35	335.14	94.34	379.41	432.10	376.18	387.37	332.24
220	72.09	325.26	92.77	367.04	423.95	366.40	381.02	330.33
230	71.76	317.96	91.42	357.24	416.97	357.34	375.49	329.51
240	72.07	310.47	90.70	349.05	411.06	348.72	370.28	328.53
250	71.66	301.04	90.08	337.46	406.61	341.08	364.23	328.55
260	71.58	296.36	89.21	331.87	402.19	335.00	356.21	328.11
270	70.78	289.58	88.30	321.68	398.33	328.68	348.48	327.47
280	71.34	287.27	87.84	318.37	395.18	322.90	341.50	327.08
290	71.18	284.35	87.36	313.58	391.60	317.20	335.30	326.37
300	71.43	279.91	87.16	306.49	387.97	312.07	331.14	325.79
310	71.59	276.93	86.71	301.90	385.06	308.13	325.72	323.69

320	71.76	275.24	86.29	298.19	382.19	303.95	320.12	321.42
330	71.17	272.44	86.11	295.62	379.14	300.75	315.62	319.54
340	70.43	269.82	85.82	290.30	375.90	297.25	311.19	316.56
350	71.20	268.09	85.48	286.37	372.67	294.11	306.88	313.67
360	71.13	264.95	85.19	283.57	369.72	290.80	303.08	310.15
370	71.18	262.63	85.01	278.95	366.72	287.96	299.33	307.14
380	71.70	261.25	84.90	275.53	364.32	284.09	295.56	304.26
390	71.90	259.03	84.74	272.86	362.15	281.22	292.23	302.92
400	71.84	257.29	84.55	269.42	359.50	278.21	289.11	301.61
410	70.81	254.99	84.44	266.62	356.32	275.78	285.99	299.56
420	72.26	252.95	84.18	263.24	352.86	273.34	283.73	296.07
430	72.11	250.87	83.98	259.83	349.65	270.89	280.84	290.40
440	71.08	248.86	83.71	255.94	346.51	267.86	278.02	284.78
450	71.37	246.60	83.71	252.46	343.53	265.36	274.88	279.42
460	71.01	244.52	83.51	249.40	340.64	263.13	271.88	275.11
470	73.09	242.18	83.95	245.99	337.76	260.24	269.32	270.72
480	76.54	241.82	87.59	244.05	335.67	259.70	267.69	266.73
490	77.94	240.88	88.43	242.07	333.91	258.52	265.63	263.49
500	78.39	240.22	89.07	241.67	332.04	256.86	264.21	260.72
510	78.68	238.89	89.41	240.50	330.35	255.83	262.31	258.58
520	78.73	238.61	89.59	237.78	328.49	253.91	259.88	256.42
530	78.70	236.63	89.56	235.70	326.48	251.93	257.45	254.28
540	78.82	234.64	89.74	232.76	324.15	249.78	254.97	252.53
550	78.82	232.65	89.73	230.98	321.62	247.62	252.18	251.35
560	78.83	230.37	89.67	228.35	319.05	245.68	249.59	249.84
570	78.49	227.78	89.54	225.38	316.33	243.29	247.10	248.62
580	78.87	226.07	89.61	223.46	313.60	241.32	244.87	247.70
590	78.89	225.57	89.56	221.92	311.26	238.85	243.18	247.02
600	78.57	223.60	89.47	220.25	308.97	236.49	242.18	246.67
610	78.05	221.65	89.10	217.87	306.31	234.38	240.33	246.79
620	78.15	219.60	88.97	215.33	303.36	232.26	238.56	246.83
630	78.17	216.38	88.65	211.78	300.03	230.47	236.04	246.60
640	77.95	211.94	88.39	207.06	296.14	227.78	233.26	246.30
650	77.91	207.63	88.08	202.32	291.82	224.33	230.20	245.05

660	78.05	203.73	87.83	197.93	287.22	220.41	226.58	243.27
670	78.04	217.58	88.19	211.90	284.24	216.73	224.19	241.52
680	78.04	221.35	88.54	227.76	283.44	218.44	227.36	238.94

DGM Outlet 1	DGM Inlet 1	Probe 1	DGM Outlet 2	DGM Inlet 2	Probe 2	Probe 3	Draft	Dilution tunnel
°F	°F	°F	°F	°F	°F	°F	"H_2O	"H_2O
76.46	76.61	86.01	75.44	74.97	83.31	89.93	0.044	0.130
79.78	79.87	81.24	76.28	76.51	83.27	81.56	0.081	0.108
82.64	80.45	81.57	76.75	77.85	81.25	81.68	0.084	0.168
84.63	81.19	81.81	77.10	78.89	85.05	83.02	0.087	0.156
85.85	81.89	82.32	77.33	79.65	87.15	86.59	0.088	0.155
86.71	82.45	82.08	77.68	80.20	87.20	88.27	0.081	0.157
87.17	83.00	81.50	78.15	80.79	85.25	86.36	0.077	0.164
87.54	83.46	81.00	78.57	81.04	84.27	N/A	0.076	0.153
87.63	83.84	80.90	78.66	81.23	83.85	N/A	0.075	0.155
87.36	84.07	80.75	78.76	81.33	83.49	N/A	0.074	0.150
87.40	84.28	80.80	78.83	81.27	83.40	N/A	0.075	0.151
87.47	84.47	83.21	79.00	81.40	83.23	N/A	0.073	0.155
87.54	84.57	83.21	78.98	81.45	83.16	N/A	0.072	0.152
87.50	84.55	82.91	78.57	81.24	83.02	N/A	0.071	0.149
87.86	84.81	83.05	78.72	81.41	82.73	N/A	0.070	0.150
87.90	85.04	83.15	79.11	81.49	82.78	N/A	0.066	0.144
87.90	85.09	83.09	79.39	81.60	82.67	N/A	0.063	0.145
88.01	85.07	82.94	79.64	81.72	82.40	N/A	0.060	0.147
88.06	85.30	82.80	79.77	81.85	82.11	N/A	0.058	0.148
88.15	85.39	82.53	80.16	82.06	81.81	N/A	0.054	0.145
88.21	85.60	82.53	80.37	82.18	81.57	N/A	0.052	0.146
88.24	85.64	82.42	80.42	82.26	89.77	N/A	0.051	0.144
88.34	85.77	82.42	80.48	82.40	88.40	N/A	0.050	0.141
88.78	85.93	82.44	80.61	82.49	89.96	N/A	0.049	0.141
89.06	85.77	82.47	80.57	82.54	83.87	N/A	0.047	0.144
88.95	85.68	82.52	80.64	82.56	82.27	N/A	0.048	0.131
88.95	85.52	82.48	80.73	82.62	82.00	N/A	0.046	0.133
89.10	85.75	82.35	80.55	82.66	81.87	N/A	0.046	0.134
88.92	85.68	82.50	80.54	82.67	81.85	N/A	0.044	0.134
89.06	85.82	82.61	80.68	82.80	84.28	N/A	0.044	0.135
89.21	85.82	82.68	80.89	82.89	85.52	N/A	0.045	0.135
89.15	85.92	82.75	81.01	83.10	85.79	N/A	0.045	0.133

89.27	86.04	82.82	81.10	83.22	85.78	N/A	0.042	0.136
89.26	86.04	82.72	80.94	83.19	85.85	N/A	0.044	0.134
89.14	85.98	82.71	81.00	83.34	85.70	N/A	0.044	0.134
88.98	86.08	82.75	81.01	83.40	85.69	N/A	0.043	0.138
89.05	86.02	82.72	80.84	83.38	85.79	N/A	0.043	0.137
89.19	86.02	82.74	80.88	83.47	85.80	N/A	0.043	0.135
88.98	86.06	82.92	81.11	83.52	85.89	N/A	0.042	0.135
88.80	86.21	82.76	81.23	83.51	85.70	N/A	0.042	0.138
88.63	86.37	82.72	81.11	83.40	85.99	N/A	0.042	0.138
88.74	86.46	82.78	81.15	83.42	84.83	N/A	0.040	0.135
88.81	86.50	82.92	81.12	83.44	80.38	N/A	0.041	0.133
88.84	86.49	82.94	81.22	83.57	80.13	N/A	0.040	0.135
88.97	86.60	83.05	81.14	83.62	80.26	N/A	0.040	0.135
88.95	86.57	82.91	81.01	83.68	80.14	N/A	0.040	0.136
88.88	86.51	83.03	81.01	83.67	83.47	N/A	0.040	0.135
88.85	86.50	83.05	80.92	83.69	85.35	N/A	0.039	0.137
88.91	86.53	83.14	80.99	83.61	86.18	N/A	0.039	0.134
88.94	86.51	83.37	80.83	83.60	86.58	N/A	0.038	0.135
89.02	86.62	83.45	80.89	83.68	86.72	N/A	0.038	0.136
88.99	86.45	83.53	80.85	83.58	86.91	N/A	0.038	0.133
89.10	86.60	83.54	80.81	83.69	86.88	N/A	0.040	0.131
89.13	86.64	83.67	80.92	83.70	86.96	N/A	0.039	0.136
89.15	86.72	83.65	80.80	83.68	87.09	N/A	0.038	0.138
89.26	86.81	83.64	80.87	83.68	82.48	N/A	0.037	0.137
89.31	86.83	83.67	80.81	83.67	85.50	N/A	0.037	0.133
89.28	86.87	83.75	80.87	83.84	86.85	N/A	0.038	0.136
89.32	86.89	83.84	81.01	83.92	87.14	N/A	0.036	0.136
89.41	86.85	83.99	81.11	84.03	87.31	N/A	0.037	0.135
89.49	86.87	84.32	81.36	84.18	87.26	N/A	0.037	0.133
89.12	87.23	84.25	81.79	84.35	87.49	N/A	0.037	0.136
89.26	86.97	84.06	81.78	84.38	87.71	N/A	0.036	0.135
89.10	87.04	84.09	81.98	84.30	87.60	N/A	0.036	0.134
89.08	87.17	83.94	82.19	84.25	82.56	N/A	0.035	0.136
89.17	87.35	84.20	82.49	84.34	82.21	N/A	0.034	0.138

89.13	87.49	84.22	82.72	84.35	82.47	N/A	0.033	0.134
89.71	87.52	84.24	82.71	84.39	82.46	N/A	0.036	0.136
89.78	87.43	84.29	82.78	84.45	82.47	N/A	0.036	0.133

Scale	DGM 1 mean	DGM 2 mean	Scale zeroed
lb	°F	°F	lb
8.10	76.53	75.21	-
54.69	79.83	76.40	46.59
49.55	81.55	77.30	41.44
44.91	82.91	77.99	36.80
40.24	83.87	78.49	32.13
36.48	84.58	78.94	28.38
34.18	85.08	79.47	26.08
31.86	85.50	79.81	23.76
29.59	85.74	79.94	21.49
27.42	85.71	80.04	19.31
25.30	85.84	80.05	17.20
23.32	85.97	80.20	15.22
21.61	86.05	80.22	13.50
20.15	86.02	79.91	12.05
18.92	86.33	80.06	10.82
17.95	86.47	80.30	9.84
17.35	86.50	80.49	9.25
16.81	86.54	80.68	8.70
16.36	86.68	80.81	8.25
16.02	86.77	81.11	7.91
15.70	86.90	81.28	7.60
15.43	86.94	81.34	7.32
15.12	87.05	81.44	7.02
14.86	87.35	81.55	6.75
14.58	87.41	81.56	6.48
14.35	87.32	81.60	6.24
14.10	87.24	81.67	5.99
13.85	87.43	81.60	5.75
13.65	87.30	81.61	5.55
13.44	87.44	81.74	5.34
13.21	87.52	81.89	5.11
13.01	87.54	82.06	4.90

12.79	87.66	82.16	4.69
12.62	87.65	82.06	4.52
12.40	87.56	82.17	4.30
12.24	87.53	82.21	4.14
12.05	87.54	82.11	3.94
11.87	87.61	82.18	3.76
11.69	87.52	82.31	3.59
11.52	87.51	82.37	3.41
11.34	87.50	82.25	3.24
11.18	87.60	82.28	3.08
11.01	87.65	82.28	2.91
10.85	87.67	82.40	2.74
10.70	87.78	82.38	2.59
10.55	87.76	82.35	2.44
10.41	87.70	82.34	2.30
10.28	87.67	82.30	2.17
10.15	87.72	82.30	2.05
10.04	87.73	82.22	1.93
9.93	87.82	82.28	1.82
9.82	87.72	82.21	1.72
9.71	87.85	82.25	1.61
9.62	87.88	82.31	1.51
9.51	87.93	82.24	1.41
9.41	88.03	82.27	1.30
9.31	88.07	82.24	1.21
9.21	88.07	82.36	1.10
9.11	88.10	82.46	1.00
8.99	88.13	82.57	0.89
8.89	88.18	82.77	0.78
8.81	88.17	83.07	0.70
8.70	88.12	83.08	0.60
8.61	88.07	83.14	0.51
8.53	88.12	83.22	0.42
8.44	88.26	83.42	0.34

8.36	88.31	83.54	0.25
8.16	88.61	83.55	0.06
8.00	88.61	83.61	-0.11

Manufacturer:	SBI	**Eng:**	Claude Pelland																				
Model:	HE350 Series (FP-15)																						
Date:	2016-06-10																						
Run:	3																						
Control #:	QC20160208																						
Rated Capacity	-	BTU/HR																					
Test Duration:	**680**																						
utput Category:	2	Start	End																				
	Barometer (in.Hg):	29.8	29.9																				
	Dry Bulb (F):																						
	Humidity (%):	89	50																				
Average Stove Temperature:		0.00																					
Moisture content of wood (wet basis):		18.96																					
	Average	0.00	0.00	0.00	347.26	75.42	98.68	#DIV/0!	0.00	0.00	0.00	0.00	0.00	0.00		85.51	88.21	81.67		82.38	82.54	83.80	0.1397
*	*	*	*	*	*1	*2	*3	*4							*	*	*	*	*	*	*	*	*
Elapsed	Weight				Flue	Room	Tunnel	Outlet	door	ash door	left side	back	right side	front	DGM 1	DGM 1	DGM 1	Filter 1	DGM 2	DGM 2	DGM 2	Filter 2	Tunnel
Time	Remaining	CO	CO_2	O_2	Gas	Temp	Dry Bulb	air							Reading	Inlet T	Outlet T	Temp	Reading	Inlet T	Outlet T	Temp	Velocity
0	51.4	0.00	0.00	0.00	293.57	75.55	96.88		0.00	0.00	0.00	0.00	0.00	0.00	1019.165	76.61	76.46	86.01	1186.692	74.97	75.44	83.31	0.130
10	46.6	0.00	0.00	0.00	695.19	75.85	159.75		0.00	0.00	0.00	0.00	0.00	0.00	1019.954	79.87	79.78	81.24	1187.498	76.51	76.28	83.27	0.108
20	41.4	0.00	0.00	0.00	760.15	76.73	151.68		0.00	0.00	0.00	0.00	0.00	0.00	1020.895	80.45	82.64	81.57	1188.445	77.85	76.75	81.25	0.168
30	36.8	0.00	0.00	0.00	802.03	77.54	159.35		0.00	0.00	0.00	0.00	0.00	0.00	1021.829	81.19	84.63	81.81	1189.395	78.89	77.10	85.05	0.156
40	32.1	0.00	0.00	0.00	820.43	78.43	161.86		0.00	0.00	0.00	0.00	0.00	0.00	1022.774	81.89	85.85	82.32	1190.342	79.65	77.33	87.15	0.155
50	28.4	0.00	0.00	0.00	697.72	79.31	136.37		0.00	0.00	0.00	0.00	0.00	0.00	1023.709	82.45	86.71	82.08	1191.291	80.20	77.68	87.20	0.157
60	26.1	0.00	0.00	0.00	615.18	79.07	128.88		0.00	0.00	0.00	0.00	0.00	0.00	1024.659	83.00	87.17	81.50	1192.220	80.79	78.15	85.25	0.164
70	23.8	0.00	0.00	0.00	597.92	78.19	126.74		0.00	0.00	0.00	0.00	0.00	0.00	1025.592	83.46	87.54	81.00	1193.152	81.04	78.57	84.27	0.153
80	21.5	0.00	0.00	0.00	599.25	78.11	125.72		0.00	0.00	0.00	0.00	0.00	0.00	1026.537	83.84	87.63	80.90	1194.082	81.23	78.66	83.85	0.155
90	19.3	0.00	0.00	0.00	595.20	79.37	125.76		0.00	0.00	0.00	0.00	0.00	0.00	1027.476	84.07	87.36	80.75	1194.998	81.33	78.76	83.49	0.150
100	17.2	0.00	0.00	0.00	590.86	78.40	124.83		0.00	0.00	0.00	0.00	0.00	0.00	1028.411	84.28	87.40	80.80	1195.915	81.27	78.83	83.40	0.151
110	15.2	0.00	0.00	0.00	574.90	79.55	121.41		0.00	0.00	0.00	0.00	0.00	0.00	1029.349	84.47	87.47	83.21	1196.831	81.40	79.00	83.23	0.155
120	13.5	0.00	0.00	0.00	564.82	80.02	121.02		0.00	0.00	0.00	0.00	0.00	0.00	1030.277	84.57	87.54	83.21	1197.743	81.45	78.98	83.16	0.152
130	12.0	0.00	0.00	0.00	540.72	79.31	117.37		0.00	0.00	0.00	0.00	0.00	0.00	1031.220	84.55	87.50	82.91	1198.660	81.24	78.57	83.02	0.149
140	10.8	0.00	0.00	0.00	521.23	76.83	113.94		0.00	0.00	0.00	0.00	0.00	0.00	1032.144	84.81	87.86	83.05	1199.570	81.41	78.72	82.73	0.150
150	9.8	0.00	0.00	0.00	497.34	79.76	113.99		0.00	0.00	0.00	0.00	0.00	0.00	1033.075	85.04	87.90	83.15	1200.492	81.49	79.11	82.78	0.144
160	9.2	0.00	0.00	0.00	457.95	79.08	110.53		0.00	0.00	0.00	0.00	0.00	0.00	1034.011	85.09	87.90	83.09	1201.407	81.60	79.39	82.67	0.145
170	8.7	0.00	0.00	0.00	423.21	77.63	106.18		0.00	0.00	0.00	0.00	0.00	0.00	1034.939	85.07	88.01	82.94	1202.318	81.72	79.64	82.40	0.147
180	8.3	0.00	0.00	0.00	401.32	73.92	102.07		0.00	0.00	0.00	0.00	0.00	0.00	1035.874	85.30	88.06	82.80	1203.234	81.85	79.77	82.11	0.148
190	7.9	0.00	0.00	0.00	369.47	73.11	98.64		0.00	0.00	0.00	0.00	0.00	0.00	1036.809	85.39	88.15	82.53	1204.151	82.06	80.16	81.81	0.145
200	7.6	0.00	0.00	0.00	348.62	71.91	96.13		0.00	0.00	0.00	0.00	0.00	0.00	1037.737	85.60	88.21	82.53	1205.063	82.18	80.37	81.57	0.146
210	7.3	0.00	0.00	0.00	335.14	72.35	94.34		0.00	0.00	0.00	0.00	0.00	0.00	1038.673	85.64	88.24	82.42	1205.989	82.26	80.42	89.77	0.144
220	7.0	0.00	0.00	0.00	325.26	72.09	92.77		0.00	0.00	0.00	0.00	0.00	0.00	1039.600	85.77	88.34	82.42	1206.898	82.40	80.48	88.40	0.141
230	6.8	0.00	0.00	0.00	317.96	71.76	91.42		0.00	0.00	0.00	0.00	0.00	0.00	1040.540	85.93	88.78	82.44	1207.833	82.49	80.61	89.96	0.141
240	6.5	0.00	0.00	0.00	310.47	72.07	90.70		0.00	0.00	0.00	0.00	0.00	0.00	1041.470	85.77	89.06	82.47	1208.769	82.54	80.57	83.87	0.144
250	6.2	0.00	0.00	0.00	301.04	71.66	90.08		0.00	0.00	0.00	0.00	0.00	0.00	1042.400	85.68	88.95	82.52	1209.708	82.56	80.64	82.27	0.131
260	6.0	0.00	0.00	0.00	296.36	71.58	89.21		0.00	0.00	0.00	0.00	0.00	0.00	1043.337	85.52	88.95	82.48	1210.635	82.62	80.73	82.00	0.133
270	5.7	0.00	0.00	0.00	289.58	70.78	88.30		0.00	0.00	0.00	0.00	0.00	0.00	1044.262	85.75	89.10	80.55	1211.560	82.35	81.87	82.66	0.134
280	5.5	0.00	0.00	0.00	287.27	71.34	87.84		0.00	0.00	0.00	0.00	0.00	0.00	1045.199	85.68	88.92	80.54	1212.493	82.50	81.85	82.67	0.134
290	5.3	0.00	0.00	0.00	284.35	71.18	87.36		0.00	0.00	0.00	0.00	0.00	0.00	1046.135	85.82	89.06	80.68	1213.425	82.61	84.28	82.80	0.135
300	5.1	0.00	0.00	0.00	279.91	71.43	87.16		0.00	0.00	0.00	0.00	0.00	0.00	1047.059	85.82	89.21	80.89	1214.355	82.68	85.52	82.89	0.135
310	4.9	0.00	0.00	0.00	276.93	71.59	86.71		0.00	0.00	0.00	0.00	0.00	0.00	1048.000	85.92	89.15	81.01	1215.290	82.75	85.79	83.10	0.133
320	4.7	0.00	0.00	0.00	275.24	71.76	86.29		0.00	0.00	0.00	0.00	0.00	0.00	1048.927	86.04	89.27	81.10	1216.219	82.82	85.78	83.22	0.136
330	4.5	0.00	0.00	0.00	272.44	71.17	86.11		0.00	0.00	0.00	0.00	0.00	0.00	1049.860	86.04	89.26	80.94	1217.155	82.72	85.85	83.19	0.134
340	4.3	0.00	0.00	0.00	269.82	70.43	85.82		0.00	0.00	0.00	0.00	0.00	0.00	1050.800	85.98	89.14	81.00	1218.083	82.71	85.70	83.34	0.134
350	4.1	0.00	0.00	0.00	268.09	71.20	85.48		0.00	0.00	0.00	0.00	0.00	0.00	1051.730	86.08	88.98	81.01	1219.005	82.75	85.69	83.40	0.138
360	3.9	0.00	0.00	0.00	264.95	71.13	85.19		0.00	0.00	0.00	0.00	0.00	0.00	1052.672	86.02	89.05	80.84	1219.937	82.72	85.79	83.38	0.137
370	3.8	0.00	0.00	0.00	262.63	71.18	85.01		0.00	0.00	0.00	0.00	0.00	0.00	1053.610	86.02	89.19	80.88	1220.860	82.74	85.80	83.47	0.135
380	3.6	0.00	0.00	0.00	261.25	71.70	84.90		0.00	0.00	0.00	0.00	0.00	0.00	1054.558	86.06	88.98	81.11	1221.785	82.92	85.89	83.52	0.135
390	3.4	0.00	0.00	0.00	259.03	71.90	84.74		0.00	0.00	0.00	0.00	0.00	0.00	1055.488	86.21	88.80	81.23	1222.700	82.76	85.70	83.51	0.138
400	3.2	0.00	0.00	0.00	257.29	71.84	84.55		0.00	0.00	0.00	0.00	0.00	0.00	1056.437	86.37	88.63	81.11	1223.610	82.72	85.99	83.40	0.138
410	3.1	0.00	0.00	0.00	254.99	70.81	84.44		0.00	0.00	0.00	0.00	0.00	0.00	1057.361	86.46	88.74	81.15	1224.517	82.78	84.83	83.42	0.135
420	2.9	0.00	0.00	0.00	252.95	72.26	84.18		0.00	0.00	0.00	0.00	0.00	0.00	1058.299	86.50	88.81	81.12	1225.419	82.92	80.38	83.44	0.133
430	2.7	0.00	0.00	0.00	250.87	72.11	83.98		0.00	0.00	0.00	0.00	0.00	0.00	1059.231	86.49	88.84	81.22	1226.326	82.94	80.13	83.57	0.135
440	2.6	0.00	0.00	0.00	248.86	71.08	83.71		0.00	0.00	0.00	0.00	0.00	0.00	1060.163	86.60	88.97	81.14	1227.234	83.05	80.26	83.62	0.135
450	2.4	0.00	0.00	0.00	246.60	71.37	83.71		0.00	0.00	0.00	0.00	0.00	0.00	1061.113	86.57	88.95	81.01	1228.148	82.91	80.14	83.68	0.136
460	2.3	0.00	0.00	0.00	244.52	71.01	83.51		0.00	0.00	0.00	0.00	0.00	0.00	1062.040	86.51	88.88	81.01	1229.049	83.03	83.47	83.67	0.135
470	2.2	0.00	0.00	0.00	242.18	73.09	83.95		0.00	0.00	0.00	0.00	0.00	0.00	1062.983	86.50	88.85	80.92	1229.953	83.05	85.35	83.69	0.137
480	2.0	0.00	0.00	0.00	241.82	76.54	87.59		0.00	0.00	0.00	0.00	0.00	0.00	1063.920	86.53	88.91	80.99	1230.856	83.14	86.18	83.61	0.134
490	1.9	0.00	0.00	0.00	240.88	77.94	88.43		0.00	0.00	0.00	0.00	0.00	0.00	1064.857	86.51	88.94	80.83	1231.757	83.37	86.58	83.60	0.135
500	1.8	0.00	0.00	0.00	240.22	78.39	89.07		0.00	0.00	0.00	0.00	0.00	0.00	1065.799	86.62	89.02	80.89	1232.660	83.45	86.72	83.68	0.136
510	1.7	0.00	0.00	0.00	238.89	78.68	89.41		0.00	0.00	0.00	0.00	0.00	0.00	1066.731	86.45	88.99	80.85	1233.567	83.53	86.91	83.58	0.133
520	1.6	0.00	0.00	0.00	238.61	78.73	89.59		0.00	0.00	0.00	0.00	0.00	0.00	1067.675	86.60	89.10	80.81	1234.471	83.54	86.88	83.69	0.131
530	1.5	0.00	0.00	0.00	236.63	78.70	89.56		0.00	0.00	0.00	0.00	0.00	0.00	1068.609	86.64	89.13	80.92	1235.378	83.67	86.96	83.70	0.136
540	1.4	0.00	0.00	0.00	234.64	78.82	89.74		0.00	0.00	0.00	0.00	0.00	0.00	1069.553	86.72	89.15	80.80	1236.280	83.65	87.09	83.68	0.138
550	1.3	0.00	0.00	0.00	232.65	78.82	89.73		0.00	0.00	0.00	0.00	0.00	0.00	1070.485	86.81	89.26	80.87	1237.180	83.64	82.48	83.68	0.137
560	1.2	0.00	0.00	0.00	230.37	78.83	89.67		0.00	0.00	0.00	0.00	0.00	0.00	1071.430	86.83	89.31	80.81	1238.082	83.67	85.50	83.67	0.133
570	1.1	0.00	0.00	0.00	227.78	78.49	89.54		0.00	0.00	0.00	0.00	0.00	0.00	1072.369	86.87	89.28	80.87	1238.982	83.75	86.85	83.84	0.136
580	1.0	0.00	0.00	0.00	226.07	78.87	89.61		0.00	0.00	0.00	0.00	0.00	0.00	1073.295	86.89	89.32	81.01	1239.875	83.84	87.14	83.92	0.136
590	0.9	0.00	0.00	0.00	225.57	78.89	89.56		0.00	0.00	0.00	0.00	0.00	0.00	1074.252	86.85	89.41	81.11	1240.791	83.99	87.31	84.03	0.135
600	0.8	0.00	0.00	0.00	223.60	78.57	89.47		0.00	0.00	0.00	0.00	0.00	0.00	1075.192	86.87	89.49	81.36	1241.696	84.32	87.26	84.18	0.133
610	0.7	0.00	0.00	0.00	221.65	78.05	89.10		0.00	0.00	0.00	0.00	0.00	0.00	1076.137	87.23	89.12	81.79	1242.611	84.25	87.49	84.35	0.136
620	0.6	0.00	0.00	0.00	219.60	78.15	88.97		0.00	0.00	0.00	0.00	0.00	0.00	1077.074	86.97	89.26	81.78	1243.540	84.06	87.71	84.38	0.135
630	0.5	0.00	0.00	0.00	216.38	78.17	88.65		0.00	0.00	0.00	0.00	0.00	0.00	1078.019	87.04	89.10	81.98	1244.458	84.09	87.60	84.30	0.134
640	0.4	0.00	0.00	0.00	211.94	77.95	88.39		0.00	0.00	0.00	0.00	0.00	0.00	1078.956	87.17	89.08	82.19	1245.376	83.94	82.56	84.25	0.136
650	0.3	0.00	0.00	0.00	207.63	77.91	88.08		0.00	0.00	0.00	0.00	0.00	0.00	1079.902	87.35	89.17	82.49	1246.282	84.20	82.21	84.34	0.138
660	0.3	0.00	0.00	0.00	203.73	78.05	87.83		0.00	0.00	0.00	0.00	0.00	0.00	1080.836	87.49	89.13	82.72	1247.196	84.22	82.47	84.35	0.134
670	0.1	0.00	0.00	0.00	217.58	78.04	88.19		0.00	0.00	0.00	0.00	0.00	0.00	1081.782	87.52	89.71	82.71	1248.131	84.24	82.46	84.39	0.136
680	-0.1	0.00	0.00	0.00	221.35	78.04	88.54		0.00	0.00	0.00	0.00	0.00	0.00	1082.718	87.43	89.78	82.78	1249.071	84.29	82.47	84.45	0.133

(ASTM E2515 Formula)

Manufacturer:	SBI				
Model:	HE350 Series (FP-15)	Stack area (ft2):	0.3491	Manufacturer:	SBI
Date:	6-10-16	Wood moisture (% wet):	18.96	Model:	HE350 Series (FP-15)
Run:	3	Load Weight (lbs wet):	51.38	Date:	6-10-16
Project #:	QC20160208	Burn Rate (Dry kg/hr):	1.666	Run:	3
	-				
Test Duration:	680				
Total Gas Volume (DGM 1):	61.542	Final Temperature (DGM #1) Degrees Rankin:	546.860		
Total Gas Volume (DGM 2):	60.721	Final Temperature (DGM #2) Degrees Rankin:	542.463		
Average Barometric Pressure:	29.85	Final Tunnel Temperature Degrees Rankin:	558.685		
Molecular Weight:	28.78	Final Tunnel Velocity (feet per second):	20.741		
Pitot Correction:	0.9585	Standardized Tunnel Flow (dscfm):	401.2198		
Calibration Factor (DGM #1):	1.0060				
Calibration Factor (DGM #2):	1.0030				
(1) VS:	0.0362				
(2) VS:	0.0367				

0.05 * Draft	Elapsed Time	DGM 1 Reading	DGM 1 Inlet T	DGM 1 Outlet T	DGM 2 Reading	DGM 2 Inlet T	DGM 2 Outlet T	Tunnel Dry Bulb	Filter Face Velocity DGM 1	Filter Face Velocity DGM 2	Delta-P (in. H2O) Tunnel	Tunnel Velocity Ft/Sec	Average Inlet + Outlet Temp. Meter 1 Deg. R	Average Inlet + Outlet Temp. Meter 2 Deg. R	Average 99.9 Proportional Rates PR1	Average 99.9 PR2	#1 dDGM Vol.Std. (ft3)	#2 dDGM Vol.Std. (ft3)	Time	Average 0.37 SQRT Delta-P
0.044	0.00	######	76.61	76.46	#####	74.97	75.44	96.88			0.130	#####	536.5	535.2					0	0.359953
0.081	10.00	######	79.87	79.78	#####	76.51	76.28	159.7	4.14	4.24	0.108	#####	539.8	536.4	103.70	107.56	0.774	0.794	10	0.328578
0.084	20.00	######	80.45	82.64	#####	77.85	76.75	151.7	4.92	4.98	0.168	#####	541.5	537.3	98.00	100.44	0.920	0.931	20	0.409352
0.087	30.00	######	81.19	84.63	#####	78.89	77.10	159.3	4.87	4.99	0.156	#####	542.9	538.0	100.80	104.67	0.911	0.933	30	0.395488
0.088	40.00	######	81.89	85.85	#####	79.65	77.33	161.9	4.92	4.97	0.155	#####	543.9	538.5	102.44	104.98	0.920	0.929	40	0.393151
0.081	50.00	######	82.45	86.71	#####	80.20	77.68	136.4	4.86	4.97	0.157	#####	544.6	538.9	98.31	102.14	0.909	0.930	50	0.395885
0.077	60.00	######	83.00	87.17	#####	80.79	78.15	128.9	4.94	4.86	0.164	#####	545.1	539.5	96.82	96.90	0.923	0.909	60	0.405135
0.076	70.00	######	83.46	87.54	#####	81.04	78.57	126.7	4.84	4.88	0.153	#####	545.5	539.8	98.26	100.49	0.906	0.912	70	0.390711
0.075	80.00	######	83.84	87.63	#####	81.23	78.66	125.7	4.91	4.86	0.155	#####	545.7	539.9	98.54	99.31	0.917	0.910	80	0.393962
0.074	90.00	######	84.07	87.36	#####	81.33	78.76	125.8	4.87	4.79	0.150	#####	545.7	540.0	99.76	99.62	0.911	0.896	90	0.386696
0.075	100.00	######	84.28	87.40	#####	81.27	78.83	124.8	4.85	4.80	0.151	#####	545.8	540.0	98.63	99.07	0.907	0.897	100	0.388958
0.073	110.00	######	84.47	87.47	#####	81.40	79.00	121.4	4.87	4.79	0.155	#####	546.0	540.2	97.43	97.43	0.910	0.896	110	0.393672
0.072	120.00	######	84.57	87.54	#####	81.45	78.98	121	4.81	4.77	0.152	#####	546.1	540.2	97.22	97.86	0.900	0.892	120	0.390092
0.071	130.00	######	84.55	87.50	#####	81.24	78.57	117.4	4.89	4.80	0.149	#####	546.0	539.9	99.40	99.11	0.915	0.897	130	0.386507
0.070	140.00	######	84.81	87.86	#####	81.41	78.72	113.9	4.79	4.76	0.150	#####	546.3	540.1	96.96	97.96	0.896	0.890	140	0.386673
0.066	150.00	######	85.04	87.90	#####	81.49	79.11	114	4.83	4.82	0.144	#####	546.5	540.3	99.52	101.07	0.902	0.901	150	0.37941
0.063	160.00	######	85.09	87.90	#####	81.60	79.39	110.5	4.85	4.78	0.145	#####	546.5	540.5	99.54	99.73	0.907	0.894	160	0.38018
0.060	170.00	######	85.07	88.01	#####	81.72	79.64	106.2	4.81	4.76	0.147	#####	546.5	540.7	97.54	98.09	0.899	0.890	170	0.383118
0.058	180.00	######	85.30	88.06	#####	81.85	79.77	102.1	4.84	4.78	0.148	#####	546.7	540.8	97.62	97.97	0.906	0.895	180	0.384087
0.054	190.00	######	85.39	88.15	#####	82.06	80.16	98.64	4.84	4.79	0.145	#####	546.8	541.1	98.11	98.49	0.906	0.895	190	0.380869
0.052	200.00	######	85.60	88.21	#####	82.18	80.37	96.13	4.81	4.76	0.146	#####	546.9	541.3	96.72	97.28	0.899	0.890	200	0.382406
0.051	210.00	######	85.64	88.24	#####	82.26	80.42	94.34	4.85	4.83	0.144	#####	546.9	541.3	98.17	99.39	0.907	0.903	210	0.379364
0.050	220.00	######	85.77	88.34	#####	82.40	80.48	92.77	4.80	4.74	0.141	#####	547.1	541.4	98.07	98.42	0.898	0.887	220	0.375396
0.049	230.00	######	85.93	88.78	#####	82.49	80.61	91.42	4.86	4.88	0.141	#####	547.4	541.6	99.17	101.02	0.910	0.912	230	0.375581
0.047	240.00	######	85.77	89.06	#####	82.54	80.57	90.7	4.81	4.88	0.144	#####	547.4	541.6	96.96	99.96	0.900	0.913	240	0.379695
0.048	250.00	######	85.68	88.95	#####	82.56	80.64	90.08	4.81	4.90	0.131	#####	547.3	541.6	101.78	105.21	0.900	0.916	250	0.361653
0.046	260.00	######	85.52	88.95	#####	82.62	80.73	89.21	4.85	4.83	0.133	#####	547.2	541.7	101.55	102.79	0.907	0.904	260	0.36503
0.046	270.00	######	85.75	89.10	#####	82.35	81.87	88.3	4.79	4.82	0.134	#####	547.4	542.1	99.68	101.90	0.895	0.901	270	0.366538
0.044	280.00	######	85.68	88.92	#####	82.50	81.85	87.84	4.85	4.86	0.134	#####	547.3	542.2	100.97	102.71	0.907	0.909	280	0.366564
0.044	290.00	######	85.82	89.06	#####	82.61	84.28	87.36	4.84	4.84	0.135	#####	547.4	543.4	100.50	101.80	0.906	0.906	290	0.367544
0.045	300.00	######	85.82	89.21	#####	82.68	85.52	87.16	4.78	4.83	0.135	#####	547.5	544.1	99.14	101.29	0.894	0.903	300	0.367648
0.045	310.00	######	85.92	89.15	#####	82.75	85.79	86.71	4.87	4.85	0.133	#####	547.5	544.3	101.61	102.44	0.910	0.907	310	0.365118
0.042	320.00	######	86.04	89.27	#####	82.82	85.78	86.29	4.79	4.82	0.136	#####	547.7	544.3	99.09	100.78	0.897	0.901	320	0.368549
0.044	330.00	######	86.04	89.26	#####	82.72	85.85	86.11	4.83	4.86	0.134	#####	547.6	544.3	100.25	102.07	0.902	0.908	330	0.366589
0.044	340.00	######	85.98	89.14	#####	82.71	85.70	85.82	4.86	4.82	0.134	#####	547.6	544.2	101.06	101.25	0.909	0.901	340	0.366405
0.043	350.00	######	86.08	88.98	#####	82.75	85.69	85.48	4.81	4.78	0.138	#####	547.5	544.2	98.62	99.21	0.900	0.895	350	0.371401
0.043	360.00	######	86.02	89.05	#####	82.72	85.79	85.19	4.87	4.84	0.137	#####	547.5	544.3	100.28	100.67	0.911	0.904	360	0.36984
0.043	370.00	######	86.02	89.19	#####	82.74	85.80	85.01	4.85	4.79	0.135	#####	547.6	544.3	100.33	100.19	0.907	0.896	370	0.367936
0.042	380.00	######	86.06	88.98	#####	82.92	85.89	84.9	4.90	4.80	0.135	#####	547.5	544.4	101.53	100.45	0.917	0.897	380	0.367553
0.042	390.00	######	86.21	88.80	#####	82.76	85.70	84.74	4.81	4.75	0.138	#####	547.5	544.2	98.59	98.42	0.900	0.888	390	0.371274
0.042	400.00	######	86.37	88.63	#####	82.72	85.99	84.55	4.91	4.72	0.138	#####	547.5	544.4	100.52	97.75	0.918	0.883	400	0.371523
0.040	410.00	######	86.46	88.74	#####	82.78	84.83	84.44	4.78	4.71	0.135	#####	547.6	543.8	98.77	98.56	0.894	0.881	410	0.367992
0.041	420.00	######	86.50	88.81	#####	82.92	80.38	84.18	4.85	4.70	0.133	#####	547.7	541.6	101.26	99.80	0.907	0.879	420	0.364201
0.040	430.00	######	86.49	88.84	#####	82.94	80.13	83.98	4.82	4.73	0.135	#####	547.7	541.5	99.72	99.50	0.901	0.885	430	0.367392
0.040	440.00	######	86.60	88.97	#####	83.05	80.26	83.71	4.82	4.73	0.135	#####	547.8	541.7	99.77	99.66	0.901	0.885	440	0.36695
0.040	450.00	######	86.57	88.95	#####	82.91	80.14	83.71	4.91	4.77	0.136	#####	547.8	541.5	101.25	99.92	0.919	0.891	450	0.36862
0.040	460.00	######	86.51	88.88	#####	83.03	83.47	83.51	4.79	4.68	0.135	#####	547.7	543.2	99.08	98.12	0.897	0.876	460	0.367599
0.039	470.00	######	86.50	88.85	#####	83.05	85.35	83.95	4.88	4.69	0.137	#####	547.7	544.2	100.22	97.55	0.912	0.877	470	0.369838
0.039	480.00	######	86.53	88.91	#####	83.14	86.18	87.59	4.85	4.68	0.134	#####	547.7	544.7	100.89	98.57	0.906	0.876	480	0.366221
0.038	490.00	######	86.51	88.94	#####	83.37	86.58	88.43	4.85	4.67	0.135	#####	547.7	545.0	100.78	98.14	0.906	0.873	490	0.366879
0.038	500.00	######	86.62	89.02	#####	83.45	86.72	89.07	4.87	4.68	0.136	#####	547.8	545.1	101.01	98.04	0.911	0.875	500	0.368109
0.038	510.00	######	86.45	88.99	#####	83.53	86.91	89.41	4.82	4.70	0.133	#####	547.7	545.2	101.05	99.49	0.901	0.879	510	0.364285
0.040	520.00	######	86.60	89.10	#####	83.54	86.88	89.59	4.88	4.68	0.131	#####	547.9	545.2	102.87	99.72	0.913	0.876	520	0.362339
0.039	530.00	######	86.64	89.13	#####	83.67	86.96	89.56	4.83	4.70	0.136	#####	547.9	545.3	100.13	98.40	0.903	0.878	530	0.368255
0.038	540.00	######	86.72	89.15	#####	83.65	87.09	89.74	4.88	4.67	0.138	#####	547.9	545.4	100.27	96.96	0.913	0.873	540	0.371651
0.037	550.00	######	86.81	89.26	#####	83.64	82.48	89.73	4.82	4.68	0.137	#####	548.0	543.1	99.55	98.14	0.901	0.875	550	0.369472
0.037	560.00	######	86.83	89.31	#####	83.67	85.50	89.67	4.88	4.68	0.133	#####	548.1	544.6	102.16	99.01	0.913	0.875	560	0.364976
0.038	570.00	######	86.87	89.28	#####	83.75	86.85	89.54	4.85	4.66	0.136	#####	548.1	545.3	100.50	97.55	0.908	0.872	570	0.368615
0.036	580.00	######	86.89	89.32	#####	83.84	87.14	89.61	4.79	4.62	0.136	#####	548.1	545.5	98.93	96.56	0.895	0.865	580	0.369266
0.037	590.00	######	86.85	89.41	#####	83.99	87.31	89.56	4.95	4.74	0.135	#####	548.1	545.7	102.79	99.53	0.925	0.887	590	0.367243
0.037	600.00	######	86.87	89.49	#####	84.32	87.26	89.47	4.86	4.68	0.133	#####	548.2	545.8	101.75	99.06	0.908	0.876	600	0.364311
0.037	610.00	######	87.23	89.12	#####	84.25	87.49	89.1	4.88	4.73	0.136	#####	548.2	545.9	101.13	98.99	0.913	0.885	610	0.368369
0.036	620.00	######	86.97	89.26	#####	84.06	87.71	88.97	4.84	4.81	0.135	#####	548.1	545.9	100.63	100.84	0.906	0.899	620	0.367099
0.036	630.00	######	87.04	89.10	#####	84.09	87.60	88.65	4.88	4.75	0.134	#####	548.1	545.8	101.58	99.73	0.913	0.888	630	0.366722
0.035	640.00	######	87.17	89.08	#####	83.94	82.56	88.39	4.84	4.77	0.136	#####	548.1	543.3	100.10	100.09	0.906	0.892	640	0.368834
0.034	650.00	######	87.35	89.17	#####	84.20	82.21	88.08	4.89	4.71	0.138	#####	548.3	543.2	100.37	98.17	0.914	0.881	650	0.371062
0.033	660.00	######	87.49	89.13	#####	84.22	82.47	87.83	4.83	4.75	0.134	#####	548.3	543.3	100.51	100.41	0.902	0.888	660	0.365713
0.036	670.00	######	87.52	89.71	#####	84.24	82.46	88.19	4.88	4.86	0.136	#####	548.6	543.3	100.77	101.79	0.913	0.909	670	0.36916
0.036	680.00	######	87.43	89.78	#####	84.29	82.47	88.54	4.83	4.89	0.133	#####	548.6	543.4	101.13	103.78	0.904	0.914	680	0.3641

Intertek Testing Services

Manufacturer:	**SBI**
Model:	**HE350 Series (FP-15)**
Date:	**6-10-16**
Run:	**3**
Project #:	**QC20160208**
Test Duration: (minutes)	**680**

RESULTS

Average emission rate:(gr/hr) 1.082

Burn Rate (Dry kg/hr): 1.666

PRESSURE FACTOR	0.99766
TEMPERATURE FACTORS	
DGM #1:	0.96551
DGM #2:	0.97334
VOLUMES SAMPLED	
DGM #1:	61.58495
DGM #2:	60.75557
TOTAL TUNNEL VOLUME (scf):	272829
SAMPLE RATIOS	
Sample Train 1:	4430.132
Sample Train 2:	4490.608
TOTAL EMISSIONS	
Sample Train 1 (g):	**11.96**
Sample Train 2 (g):	**12.57**
EMISSION RATES	
Sample Train 1 (g/hr):	**1.06**
Sample Train 2 (g/hr):	**1.11**
MAX Allowed	7.50%
DEVIATION:	2.50%

BAROMETRIC PRESSURE

Average:	29.85
Start:	29.8
End:	29.9

DRY GAS METER VALUES

DGM #1	Final:	1082.718
	Initial:	1019.165
DGM #2	Final:	1249.071
	Initial:	1186.692

TEMPERATURES (DEG. RANKIN)

DGM #1:	546.860
DGM #2:	542.463

CALIBRATION FACTORS

DGM #1:	1.0060
DGM #2:	1.0030

TUNNEL FLOW RATE: 401.220

PARTICULATE CATCH (mg)

Total Sample Train 1:	2.7
Total Sample Train 2:	2.8
Filter and seal Sample Train 1:	2.5
Filter and seal Sample Train 2:	2.7
Probe Sample Train 1:	0.2
Probe Sample Train 2:	0.1

Manufacturer:	SBI	**Eng:**	Claude Pelland																					
Model:	HE350 Series (FP-15)																							
Date:	2016-06-10																							
Run:	3																							
Control #:	QC20160208																							
Rated Capacity	-	BTU/HR																						
Test Duration:	**60**																							
Output Category:	2	Start	End																					
	Barometer (in.Hg):	29.8	29.9																					
	Dry Bulb (F):																							
	Humidity (%):	89	50																					
Average Stove Temperature:		0.00																						
Moisture content of wood (wet basis):		20.13																						
	Average	0.00	0.00	0.00	669.18	77.50	142.11	#DIV/0!	0.00	0.00	0.00	0.00	0.00	0.00		80.78	83.32	85.34					0.1481	0.08
*	*	*	*	*	*1	*2	*3	*4							*	*	*	*					*	*
Elapsed	Weight				Flue	Room	Tunnel	Outlet	door	ash door	left side	back	right side	front	DGM 3	DGM 3	DGM 3	Filter 3					Tunnel	
Time	Remaining	CO	CO_2	O_2	Gas	Temp	Dry Bulb	air							Reading	Inlet T	Outlet T	Temp					Velocity	Draft
0.00	51.4	0.00	0.00	0.00	293.57	75.55	96.88		0.00	0.00	0.00	0.00	0.00	0.00	557.315	76.61	76.46	89.93					0.130	0.044
10.00	46.6	0.00	0.00	0.00	695.19	75.85	159.75		0.00	0.00	0.00	0.00	0.00	0.00	558.521	79.87	79.78	81.56					0.108	0.081
20.00	41.4	0.00	0.00	0.00	760.15	76.73	151.68		0.00	0.00	0.00	0.00	0.00	0.00	560.030	80.45	82.64	81.68					0.168	0.084
30.00	36.8	0.00	0.00	0.00	802.03	77.54	159.35		0.00	0.00	0.00	0.00	0.00	0.00	561.400	81.19	84.63	83.02					0.156	0.087
40.00	32.1	0.00	0.00	0.00	820.43	78.43	161.86		0.00	0.00	0.00	0.00	0.00	0.00	562.710	81.89	85.85	86.59					0.155	0.088
50.00	28.4	0.00	0.00	0.00	697.72	79.31	136.37		0.00	0.00	0.00	0.00	0.00	0.00	564.010	82.45	86.71	88.27					0.157	0.081
60.00	26.1	0.00	0.00	0.00	615.18	79.07	128.88		0.00	0.00	0.00	0.00	0.00	0.00	565.410	83.00	87.17	86.36					0.164	0.077

																	(ASTM E2515 Formula)					
			Manufacturer:		SBI																	
			Model:		HE350 Series (FP-15)							Stack area (ft2):	0.349066			Manufacturer:		SBI			
			Date:		6-10-16							Wood moisture (% wet):	20.13			Model:		HE350 Series (FP-15)			
			Run:		3							Load Weight (lbs wet):	51.38			Date:		6-10-16			
			Project #:		QC20160208							Burn Rate (Dry kg/hr):	18.615			Run:		3			
					-																	
			Test Duration:		60																	
			Total Gas Volume (DGM 3):		7.748							Final Temperature (DGM #3) Degrees Rankin:					542.051					
			Average Barometric Pressure:		29.85							Final Tunnel Temperature Degrees Rankin:					460.000					
			Molecular Weight:		28.78							Final Tunnel Velocity (feet per second):					19.342					
			Pitot Correction:		0.958498							Standardized Tunnel Flow (dscfm):					454.441041					
			Calibration Factor (DGM #3):		0.9870																	
														Average								
				(1) VS:	0.325624									Inlet +								
				(2) VS:	#DIV/0!			Filter						Outlet		Average		#3				Average
								Face		Delta-P	Tunnel			Temp.		**98.7**		dDGM				**0.38**
Elapsed	DGM 3	DGM 3	DGM 3					Velocity		(in. H2O)	Velocity			Meter 3		**Proportional Rates**		Vol.Std.				SQRT
Time	Reading	Inlet T	Outlet T					DGM 3		Tunnel	Ft/Sec			Deg. R		**PR1**		(ft3)			Time	Delta-P
0.00	557.32	76.61	76.46							0.130	18.134			536.5							0	0.359953
10.00	558.52	79.87	79.78					6.21		0.108	16.553			539.8		105.27		1.161			10	0.328578
20.00	560.03	80.45	82.64					7.74		0.168	20.623			541.5		105.06		1.448			20	0.409352
30.00	561.40	81.19	84.63					7.01		0.156	19.924			542.9		98.23		1.311			30	0.395488
40.00	562.71	81.89	85.85					6.69		0.155	19.807			543.9		94.15		1.252			40	0.393151
50.00	564.01	82.45	86.71					6.63		0.157	19.944			544.6		92.54		1.241			50	0.395885
60.00	565.41	83.00	87.17					7.14		0.164	20.410			545.1		97.21		1.335			60	0.405135

Intertek Testing Services

Manufacturer: **SBI**
Model: **HE350 Series (FP-15)**

Date: **6-10-16**
Run: **3**
Project #: **QC20160208**
Test Duration: (minutes) **60**

RESULTS

Average emission rate:(gr/hr) **14.4**

Burn Rate (Dry kg/hr): N/A

PRESSURE FACTOR 0.99766

BAROMETRIC PRESSURE

Average:	29.85
Start:	29.8
End:	29.9

TEMPERATURE FACTORS

DGM #3: 0.97408

DRY GAS METER VALUES

VOLUMES SAMPLED

DGM #3	Final:	565.410
	Initial:	557.315

DGM #3: 7.76444

TOTAL TUNNEL VOLUME (scf): 27266

SAMPLE RATIOS

Sample Train 3: 3511.708

TEMPERATURES (DEG. RANKIN)

DGM #3: 542.051

TOTAL EMISSIONS

Sample Train 3 (g): **14.40**

CALIBRATION FACTORS

DGM #3: 0.9870

EMISSION RATES

Sample Train 3 (g/hr): **14.40**

TUNNEL FLOW RATE: 454.441

PARTICULATE CATCH (mg)

Total Sample Train 3: 4.1

Filter and seal Sample Train 3: 3.2

MAX Allowed N/A

Probe Sample Train 3: 0.9

DEVIATION: N/A

	Train 3	
Cs	0.00052805	
Cr	0	
Et	14.40	
Et	AVERAGE	

Room Particulate Correction

Mr	0	Milligram Catch (mg)
Vmr	7.7544	Total Volume Sampled (dscf)

Rotometer (glass) at 100 flow rate is 0.12924 cfm

Grams Emissions

AIR LIQUIDE

CERTIFICAT D'ANALYSE

MONTREAL SPECIALTY GAS PLANT
11201 RAY LAWSON
MONTREAL QC
H1J 1M6

Client: QUEBEC
2230 BOUL. CHAREST O. STE-FOY
QUEBEC QUEBEC
G1N 2G3 CANADA

Date d'analyse:	03/05/2016	**No de série:**	SG-140107-A
Code de produit:	SPG-4MX0024334	**No d`ordre de fabrication:**	16-SGM-1725
Qualité:	CERTIFIE	**Pression:**	6750 kPa (15°C)
Taille:	7AL		1000 psi (21°C)
Raccord de sortie du robinet:	CGA 590	**Volume:**	0,485 m3
		Date d'expiration:	03/05/2019

COMPOSANTS	CONCENTRATION NOMINALE	RÉSULTAT D'ANALYSE
MONOXYDE DE CARBONE	0,8 % molaire	0,798 % molaire
OXYGÈNE	20 % molaire	19,8 % molaire
AZOTE	BALANCE	BALANCE
DIOXYDE DE CARBONE	40 % molaire	39,5 % molaire

Analyse réalisée par:

FREDERIC GAGNON B.Sc.

MÉTHODE D'ANALYSE:

La méthode d'analyse est basée sur le principe de la chromatographie en phase gazeuse comme décrit dans les Instructions d'Opérations de Air Liquide Canada. Selon les besoins,on choisi préférentiellement un détecteur FID ou TCD avec une colonne capillaire ou une colonne remplie.

La teneur en oxygène est mesurée à l'aide d'un analyseur d'oxygène Servomex.

PRÉCISION ANALYTIQUE:

Les spécifications pour les concentrations rapportées sont: +/- 2% pour les constituants en concentration supérieure à 0.5% et +/- 5% pour les constituants en concentration inférieure 0.5%. Sauf indication contraire, la précision d'analyse est indiquée en pourcentage du constituant. Dans certains cas, les valeurs peuvent changer en fonction de la nature, du nombre et de la concentration des constituants du mélange.

AIR LIQUIDE

CERTIFICAT D'ANALYSE

MONTREAL SPECIALTY GAS PLANT
11201 RAY LAWSON
MONTREAL QC
H1J 1M6

Client: QUEBEC
2230 BOUL. CHAREST O. STE-FOY
QUEBEC QUEBEC
G1N 2G3 CANADA

Date d'analyse:	03/05/2016	**No de série:**	SG-130251-A
Code de produit:	SPG-2MX0014570	**No d`ordre de fabrication:**	16-SGM-1718
Qualité:	CERTIFIE	**Pression:**	13500 kPa (15°C)
Taille:	7AL		2000 psi (21°C)
Raccord de sortie du robinet:	CGA 350	**Volume:**	807,0 L
		Date d'expiration:	03/05/2019

COMPOSANTS	CONCENTRATION NOMINALE	RÉSULTAT D'ANALYSE
MONOXYDE DE CARBONE	0,8 % molaire	0,770 % molaire
AZOTE	BALANCE	BALANCE

Analyse réalisée par:

FREDERIC GAGNON B.Sc.

MÉTHODE D'ANALYSE:

La méthode d'analyse est basée sur le principe de la chromatographie en phase gazeuse comme décrit dans les Instructions d'Opérations de Air Liquide Canada. Selon les besoins,on choisi préférentiellement un détecteur FID ou TCD avec une colonne capillaire ou une colonne remplie.

PRÉCISION ANALYTIQUE:

Les spécifications pour les concentrations rapportées sont: +/- 2% pour les constituants en concentration supérieure à 0.5% et +/- 5% pour les constituants en concentration inférieure 0.5%. Sauf indication contraire, la précision d'analyse est indiquée en pourcentage du constituant. Dans certains cas, les valeurs peuvent changer en fonction de la nature, du nombre et de la concentration des constituants du mélange.

AIR LIQUIDE

CERTIFICAT D'ANALYSE

MONTREAL SPECIALTY GAS PLANT
11201 RAY LAWSON
MONTREAL QC
H1J 1M6

Client: QUEBEC
2230 BOUL. CHAREST O. STE-FOY
QUEBEC QUEBEC
G1N 2G3 CANADA

Date d'analyse:	03/05/2016	**No de série:**	SG-130201-A
Code de produit:	SPG-2MX0024331	**No d`ordre de fabrication:**	16-SGM-1727
Qualité:	CERTIFIE	**Pression:**	13500 kPa (15°C)
Taille:	7AL		2000 psi (21°C)
Raccord de sortie du robinet:	CGA 350	**Volume:**	812,0 L
		Date d'expiration:	03/05/2019

COMPOSANTS	CONCENTRATION NOMINALE	RÉSULTAT D'ANALYSE
MONOXYDE DE CARBONE	8 % molaire	7,97 % molaire
AZOTE	BALANCE	BALANCE

Analyse réalisée par:

FREDERIC GAGNON-B.Sc.

MÉTHODE D'ANALYSE:

La méthode d'analyse est basée sur le principe de la chromatographie en phase gazeuse comme décrit dans les Instructions d'Opérations de Air Liquide Canada. Selon les besoins,on choisi préférentiellement un détecteur FID ou TCD avec une colonne capillaire ou une colonne remplie.

PRÉCISION ANALYTIQUE:

Les spécifications pour les concentrations rapportées sont: +/- 2% pour les constituants en concentration supérieure à 0,5% et +/- 5% pour les constituants en concentration inférieure 0.5%. Sauf indication contraire, la précision d'analyse est indiquée en pourcentage du constituant. Dans certains cas, les valeurs peuvent changer en fonction de la nature, du nombre et de la concentration des constituants du mélange.

AIR LIQUIDE

CERTIFICAT D'ANALYSE

MONTREAL SPECIALTY GAS PLANT
11201 RAY LAWSON
MONTREAL QC
H1J 1M6

Client: QUEBEC
2230 BOUL. CHAREST O. STE-FOY
QUEBEC QUEBEC
G1N 2G3 CANADA

Date d'analyse:	03/05/2016	**No de série:**	SG090157A
Code de produit:	SPG-2MX0024332	**No d`ordre de fabrication:**	16-SGM-1726
Qualité:	CERTIFIE	**Pression:**	7571,5 kPa (15°C)
Taille:	7AL		1121 psi (21°C)
Raccord de sortie du robinet:	CGA 580	**Volume:**	886,0 L
		Date d'expiration:	03/05/2019

COMPOSANTS	CONCENTRATION NOMINALE	RÉSULTAT D'ANALYSE
DIOXYDE DE CARBONE	40 % molaire	39,4 % molaire
AZOTE	BALANCE	BALANCE

Analyse réalisée par:

SAMIA AMRANI B.Sc.

MÉTHODE D'ANALYSE:

La méthode d'analyse est basée sur le principe de la chromatographie en phase gazeuse comme décrit dans les Instructions d'Opérations de Air Liquide Canada. Selon les besoins,on choisi préférentiellement un détecteur FID ou TCD avec une colonne capillaire ou une colonne remplie.

PRÉCISION ANALYTIQUE:

Les spécifications pour les concentrations rapportées sont: +/- 2% pour les constituants en concentration supérieure à 0,5% et +/- 5% pour les constituants en concentration inférieure 0,5%. Sauf indication contraire, la précision d'analyse est indiquée en pourcentage du constituant. Dans certains cas, les valeurs peuvent changer en fonction de la nature, du nombre et de la concentration des constituants du mélange.

AIR LIQUIDE

CERTIFICAT D'ANALYSE

MONTREAL SPECIALTY GAS PLANT
11201 RAY LAWSON
MONTREAL QC
H1J 1M6

Client: QUEBEC
2230 BOUL. CHAREST O. STE-FOY
QUEBEC QUEBEC
G1N 2G3 CANADA

Date d'analyse:	02/05/2016	**No de série:**	S980151E
Code de produit:	SPG-2MX0007686	**No d`ordre de fabrication:**	16-SGM-1717
Qualité:	CERTIFIE	**Pression:**	13500 kPa (15°C)
Taille:	7AL		2000 psi (21°C)
Raccord de sortie du robinet:	CGA 580	**Volume:**	860,337 L
		Date d'expiration:	02/05/2019

COMPOSANTS	CONCENTRATION NOMINALE	RÉSULTAT D'ANALYSE
DIOXYDE DE CARBONE	8 % molaire	8,08 % molaire
AZOTE	BALANCE	BALANCE

Analyse réalisée par:

SAMIA AMRANI B.Sc.

MÉTHODE D'ANALYSE:

La méthode d'analyse est basée sur le principe de la chromatographie en phase gazeuse comme décrit dans les Instructions d'Opérations de Air Liquide Canada. Selon les besoins,on choisi préférentiellement un détecteur FID ou TCD avec une colonne capillaire ou une colonne remplie.

PRÉCISION ANALYTIQUE:

Les spécifications pour les concentrations rapportées sont: +/- 2% pour les constituants en concentration supérieure à 0.5% et +/- 5% pour les constituants en concentration inférieure 0.5%. Sauf indication contraire, la précision d'analyse est indiquée en pourcentage du constituant. Dans certains cas, les valeurs peuvent changer en fonction de la nature, du nombre et de la concentration des constituants du mélange.

Date: 2016-02-04

Equipment: Test bench #4
T2 (Ambiant) Temperature: 68 F
Accuracy: 0.01 R.H.: 18%
Reference: SBI-096

S.D.	0.00	%	
R.M.U.	0.01	%	
O.M.U	**0.59**	**%**	
	Ave A.D.	0.29	%
Standard	Reading	A.D.	
70.0	69.79	0.30	
70.0	69.80	0.29	
70.0	69.75	0.36	

S.D.	0.00	%	
R.M.U.	0.01	%	
O.M.U	**0.28**	**%**	
	Ave A.D.	0.14	%
Standard	Reading	A.D.	
200.0	199.73	0.14	
200.0	199.72	0.14	
200.0	199.64	0.18	

S.D.	0.00	%	
R.M.U.	0.00	%	
O.M.U	**0.03**	**%**	
	Ave A.D.	0.02	%
Standard	Reading	A.D.	
600.0	599.89	0.02	
600.0	599.92	0.01	
600.0	599.86	0.02	

S.D.	0.00	%	
R.M.U.	0.00	%	
O.M.U	**0.01**	**%**	
	Ave A.D.	0.01	%
Standard	Reading	A.D.	
1000.0	1000.08	0.01	
1000.0	1000.04	0.00	
1000.0	1000.05	0.01	

S.D.	0.00	%	
R.M.U.	0.00	%	
O.M.U	**0.02**	**%**	
	Ave A.D.	0.01	%
Standard	Reading	A.D.	
1400.0	1400.12	0.01	
1400.0	1400.13	0.01	
1400.0	1400.08	0.01	



Vincent Pelletier

Date: 2016-02-04

Equipment: Test bench #4
T3 (Dilution tunnel) Temperature: 68 F
Accuracy: 0.01 R.H.: 18%
Reference: SBI-096

S.D.	0.01	%	
R.M.U.	0.01	%	
O.M.U	**0.98**	**%**	
	Ave A.D.	0.49	%
Standard	Reading	A.D.	
70.0	69.64	0.51	
70.0	69.67	0.47	
70.0	69.70	0.43	

S.D.	0.00	%	
R.M.U.	0.01	%	
O.M.U	**0.44**	**%**	
	Ave A.D.	0.22	%
Standard	Reading	A.D.	
200.0	199.56	0.22	
200.0	199.56	0.22	
200.0	199.56	0.22	

S.D.	0.00	%	
R.M.U.	0.00	%	
O.M.U	**0.09**	**%**	
	Ave A.D.	0.04	%
Standard	Reading	A.D.	
600.0	599.76	0.04	
600.0	599.73	0.04	
600.0	599.75	0.04	

S.D.	0.00	%	
R.M.U.	0.00	%	
O.M.U	**0.02**	**%**	
	Ave A.D.	0.01	%
Standard	Reading	A.D.	
1000.0	999.92	0.01	
1000.0	999.93	0.01	
1000.0	999.91	0.01	

S.D.	0.00	%	
R.M.U.	0.00	%	
O.M.U	**0.01**	**%**	
	Ave A.D.	0.00	%
Standard	Reading	A.D.	
1400.0	1399.96	0.00	
1400.0	1399.96	0.00	
1400.0	1399.90	0.01	

Vincent Pelletier

Date: 2016-02-04

Equipment: Test bench #4
T4 (Firebox top) Temperature: 68 F
Accuracy: 0.01 R.H.: 18%
Reference: SBI-096

S.D.	0.01	%	
R.M.U.	0.01	%	
O.M.U	**1.16**	**%**	
	Ave A.D.	0.58	%
Standard	Reading	A.D.	
70.0	69.58	0.60	
70.0	69.61	0.56	
70.0	69.61	0.56	

S.D.	0.00	%	
R.M.U.	0.01	%	
O.M.U	**0.48**	**%**	
	Ave A.D.	0.24	%
Standard	Reading	A.D.	
200.0	199.53	0.24	
200.0	199.51	0.25	
200.0	199.54	0.23	

S.D.	0.00	%	
R.M.U.	0.00	%	
O.M.U	**0.10**	**%**	
	Ave A.D.	0.05	%
Standard	Reading	A.D.	
600.0	599.70	0.05	
600.0	599.70	0.05	
600.0	599.72	0.05	

S.D.	0.00	%	
R.M.U.	0.00	%	
O.M.U	**0.03**	**%**	
	Ave A.D.	0.01	%
Standard	Reading	A.D.	
1000.0	999.84	0.02	
1000.0	999.87	0.01	
1000.0	999.88	0.01	

S.D.	0.00	%	
R.M.U.	0.00	%	
O.M.U	**0.02**	**%**	
	Ave A.D.	0.01	%
Standard	Reading	A.D.	
1400.0	1399.89	0.01	
1400.0	1399.88	0.01	
1400.0	1399.89	0.01	

Vincent Pelletier

Date: 2016-02-04

Equipment: Test bench #4
T5 (Firebox back) Temperature: 68 F
Accuracy: 0.01 R.H.: 18%
Reference: SBI-096

S.D.	0.01	%	
R.M.U.	0.01	%	
O.M.U	**1.29**	**%**	
	Ave A.D.	0.64	%
Standard	Reading	A.D.	
70.0	69.53	0.67	
70.0	69.57	0.62	
70.0	69.60	0.57	

S.D.	0.00	%	
R.M.U.	0.01	%	
O.M.U	**0.54**	**%**	
	Ave A.D.	0.27	%
Standard	Reading	A.D.	
200.0	199.45	0.27	
200.0	199.46	0.27	
200.0	199.42	0.29	

S.D.	0.00	%	
R.M.U.	0.00	%	
O.M.U	**0.13**	**%**	
	Ave A.D.	0.06	%
Standard	Reading	A.D.	
600.0	599.63	0.06	
600.0	599.60	0.07	
600.0	599.60	0.07	

S.D.	0.00	%	
R.M.U.	0.00	%	
O.M.U	**0.05**	**%**	
	Ave A.D.	0.02	%
Standard	Reading	A.D.	
1000.0	999.77	0.02	
1000.0	999.77	0.02	
1000.0	999.78	0.02	

S.D.	0.00	%	
R.M.U.	0.00	%	
O.M.U	**0.03**	**%**	
	Ave A.D.	0.02	%
Standard	Reading	A.D.	
1400.0	1399.80	0.01	
1400.0	1399.76	0.02	
1400.0	1399.82	0.01	

Vincent Pelletier

Date: 2016-02-04

Equipment: Test bench #4
T6 (Firebox right) Temperature: 68 F
Accuracy: 0.01 R.H.: 18%
Reference: SBI-096

S.D.	0.01	%	
R.M.U.	0.01	%	
O.M.U	**1.57**	**%**	
	Ave A.D.	0.79	%
Standard	Reading	A.D.	
70.0	69.43	0.81	
70.0	69.47	0.76	
70.0	69.48	0.75	

S.D.	0.00	%	
R.M.U.	0.01	%	
O.M.U	**0.62**	**%**	
	Ave A.D.	0.31	%
Standard	Reading	A.D.	
200.0	199.36	0.32	
200.0	199.40	0.30	
200.0	199.38	0.31	

S.D.	0.00	%	
R.M.U.	0.00	%	
O.M.U	**0.14**	**%**	
	Ave A.D.	0.07	%
Standard	Reading	A.D.	
600.0	599.57	0.07	
600.0	599.57	0.07	
600.0	599.55	0.07	

S.D.	0.00	%	
R.M.U.	0.00	%	
O.M.U	**0.06**	**%**	
	Ave A.D.	0.03	%
Standard	Reading	A.D.	
1000.0	999.73	0.03	
1000.0	999.72	0.03	
1000.0	999.72	0.03	

S.D.	0.00	%	
R.M.U.	0.00	%	
O.M.U	**0.04**	**%**	
	Ave A.D.	0.02	%
Standard	Reading	A.D.	
1400.0	1399.73	0.02	
1400.0	1399.73	0.02	
1400.0	1399.73	0.02	



Vincent Pelletier

Date: 2016-02-04

Equipment: Test bench #4
T7 (Firebox left) Temperature: 68 F
Accuracy: 0.01 R.H.: 18%
Reference: SBI-096

S.D.	0.01	%	
R.M.U.	0.01	%	
O.M.U	**1.55**	**%**	
	Ave A.D.	0.78	%
Standard	Reading	A.D.	
70.0	69.50	0.71	
70.0	69.41	0.84	
70.0	69.41	0.85	

S.D.	0.00	%	
R.M.U.	0.01	%	
O.M.U	**0.67**	**%**	
	Ave A.D.	0.33	%
Standard	Reading	A.D.	
200.0	199.36	0.32	
200.0	199.31	0.35	
200.0	199.33	0.34	

S.D.	0.00	%	
R.M.U.	0.00	%	
O.M.U	**0.17**	**%**	
	Ave A.D.	0.09	%
Standard	Reading	A.D.	
600.0	599.48	0.09	
600.0	599.48	0.09	
600.0	599.49	0.08	

S.D.	0.00	%	
R.M.U.	0.00	%	
O.M.U	**0.07**	**%**	
	Ave A.D.	0.03	%
Standard	Reading	A.D.	
1000.0	999.66	0.03	
1000.0	999.67	0.03	
1000.0	999.68	0.03	

S.D.	0.00	%	
R.M.U.	0.00	%	
O.M.U	**0.05**	**%**	
	Ave A.D.	0.02	%
Standard	Reading	A.D.	
1400.0	1399.66	0.02	
1400.0	1399.65	0.02	
1400.0	1399.68	0.02	

Vincent Pelletier

Date: 2016-02-04

Equipment: Test bench #4
T8 (Firebox bottom) Temperature: 68 F
Accuracy: 0.01 R.H.: 18%
Reference: SBI-096

S.D.	0.01	%	
R.M.U.	0.01	%	
O.M.U	**1.74**	**%**	
	Ave A.D.	0.87	%
Standard	Reading	A.D.	
70.0	69.37	0.89	
70.0	69.41	0.85	
70.0	69.53	0.67	

S.D.	0.00	%	
R.M.U.	0.01	%	
O.M.U	**0.71**	**%**	
	Ave A.D.	0.35	%
Standard	Reading	A.D.	
200.0	199.29	0.35	
200.0	199.30	0.35	
200.0	199.24	0.38	

S.D.	0.00	%	
R.M.U.	0.00	%	
O.M.U	**0.18**	**%**	
	Ave A.D.	0.09	%
Standard	Reading	A.D.	
600.0	599.47	0.09	
600.0	599.45	0.09	
600.0	599.42	0.10	

S.D.	0.00	%	
R.M.U.	0.00	%	
O.M.U	**0.08**	**%**	
	Ave A.D.	0.04	%
Standard	Reading	A.D.	
1000.0	999.61	0.04	
1000.0	999.62	0.04	
1000.0	999.62	0.04	

S.D.	0.00	%	
R.M.U.	0.00	%	
O.M.U	**0.06**	**%**	
	Ave A.D.	0.03	%
Standard	Reading	A.D.	
1400.0	1399.62	0.03	
1400.0	1399.60	0.03	
1400.0	1399.62	0.03	

Vincent Pelletier

Date: 2016-02-04

Equipment: Test bench #4
T11 (Probe temp 1) Temperature: 68 F
Accuracy: 0.01 R.H.: 18%
Reference: SBI-096

S.D.	0.01	%	
R.M.U.	0.01	%	
O.M.U	**2.05**	**%**	
	Ave A.D.	1.02	%
Standard	Reading	A.D.	
70.0	69.27	1.05	
70.0	69.30	1.00	
70.0	69.31	0.99	

S.D.	0.00	%	
R.M.U.	0.01	%	
O.M.U	**0.80**	**%**	
	Ave A.D.	0.40	%
Standard	Reading	A.D.	
200.0	199.21	0.39	
200.0	199.20	0.40	
200.0	199.19	0.40	

S.D.	0.00	%	
R.M.U.	0.00	%	
O.M.U	**0.20**	**%**	
	Ave A.D.	0.10	%
Standard	Reading	A.D.	
600.0	599.41	0.10	
600.0	599.39	0.10	
600.0	599.36	0.11	

S.D.	0.00	%	
R.M.U.	0.00	%	
O.M.U	**0.09**	**%**	
	Ave A.D.	0.05	%
Standard	Reading	A.D.	
1000.0	999.54	0.05	
1000.0	999.52	0.05	
1000.0	999.53	0.05	

S.D.	0.00	%	
R.M.U.	0.00	%	
O.M.U	**0.07**	**%**	
	Ave A.D.	0.03	%
Standard	Reading	A.D.	
1400.0	1399.55	0.03	
1400.0	1399.54	0.03	
1400.0	1399.54	0.03	

Vincent Pelletier

Date: 2016-02-04

Equipment: Test bench #4
T14 (Probe temp 2) Temperature: 68 F
Accuracy: 0.01 R.H.: 18%
Reference: SBI-096

S.D.	0.01	%	
R.M.U.	0.01	%	
O.M.U	**1.95**	**%**	
	Ave A.D.	0.98	%
Standard	Reading	A.D.	
70.0	69.35	0.93	
70.0	69.29	1.02	
70.0	69.29	1.02	

S.D.	0.00	%	
R.M.U.	0.01	%	
O.M.U	**0.79**	**%**	
	Ave A.D.	0.40	%
Standard	Reading	A.D.	
200.0	199.21	0.40	
200.0	199.21	0.40	
200.0	199.21	0.40	

S.D.	0.00	%	
R.M.U.	0.00	%	
O.M.U	**0.21**	**%**	
	Ave A.D.	0.10	%
Standard	Reading	A.D.	
600.0	599.37	0.10	
600.0	599.38	0.10	
600.0	599.35	0.11	

S.D.	0.00	%	
R.M.U.	0.00	%	
O.M.U	**0.10**	**%**	
	Ave A.D.	0.05	%
Standard	Reading	A.D.	
1000.0	999.55	0.04	
1000.0	999.41	0.06	
1000.0	999.55	0.05	

S.D.	0.00	%	
R.M.U.	0.00	%	
O.M.U	**0.06**	**%**	
	Ave A.D.	0.03	%
Standard	Reading	A.D.	
1400.0	1399.57	0.03	
1400.0	1399.57	0.03	
1400.0	1399.36	0.05	

Vincent Pelletier

Date: 2016-02-04

Equipment: Test bench #4
T15 (Spare 1) Temperature: 68 F
Accuracy: 0.01 R.H.: 18%
Reference: SBI-096

S.D.	0.01	%	
R.M.U.	0.01	%	
O.M.U	**1.75**	**%**	
	Ave A.D.	0.87	%
Standard	Reading	A.D.	
70.0	69.37	0.90	
70.0	69.41	0.85	
70.0	69.37	0.89	

S.D.	0.00	%	
R.M.U.	0.01	%	
O.M.U	**0.70**	**%**	
	Ave A.D.	0.35	%
Standard	Reading	A.D.	
200.0	199.29	0.35	
200.0	199.31	0.35	
200.0	199.29	0.35	

S.D.	0.00	%	
R.M.U.	0.00	%	
O.M.U	**0.18**	**%**	
	Ave A.D.	0.09	%
Standard	Reading	A.D.	
600.0	599.45	0.09	
600.0	599.48	0.09	
600.0	599.46	0.09	

S.D.	0.00	%	
R.M.U.	0.00	%	
O.M.U	**0.07**	**%**	
	Ave A.D.	0.04	%
Standard	Reading	A.D.	
1000.0	999.64	0.04	
1000.0	999.62	0.04	
1000.0	999.62	0.04	

S.D.	0.00	%	
R.M.U.	0.00	%	
O.M.U	**0.05**	**%**	
	Ave A.D.	0.02	%
Standard	Reading	A.D.	
1400.0	1399.65	0.02	
1400.0	1399.65	0.02	
1400.0	1399.62	0.03	

Vincent Pelletier

Date: 2016-02-04

Equipment: Test bench #4
T2 (Spare 2) Temperature: 68 F
Accuracy: 0.01 R.H.: 18%
Reference: SBI-096

S.D.	0.01	%	
R.M.U.	0.01	%	
O.M.U	**1.33**	**%**	
	Ave A.D.	0.66	%
Standard	Reading	A.D.	
70.0	69.51	0.69	
70.0	69.56	0.63	
70.0	69.61	0.56	

S.D.	0.00	%	
R.M.U.	0.01	%	
O.M.U	**0.55**	**%**	
	Ave A.D.	0.27	%
Standard	Reading	A.D.	
200.0	199.46	0.27	
200.0	199.45	0.28	
200.0	199.47	0.27	

S.D.	0.00	%	
R.M.U.	0.00	%	
O.M.U	**0.13**	**%**	
	Ave A.D.	0.06	%
Standard	Reading	A.D.	
600.0	599.63	0.06	
600.0	599.60	0.07	
600.0	599.64	0.06	

S.D.	0.00	%	
R.M.U.	0.00	%	
O.M.U	**0.08**	**%**	
	Ave A.D.	0.04	%
Standard	Reading	A.D.	
1000.0	999.77	0.02	
1000.0	999.48	0.05	
1000.0	999.81	0.02	

S.D.	0.00	%	
R.M.U.	0.00	%	
O.M.U	**0.03**	**%**	
	Ave A.D.	0.01	%
Standard	Reading	A.D.	
1400.0	1399.81	0.01	
1400.0	1399.84	0.01	
1400.0	1399.83	0.01	



Vincent Pelletier

Rapport d'étalonnage No. CA0003-506-040116

Mettler Toledo
Service Business Unit Industrial
1900 Polaris Parkway
Columbus, Ohio 43240
1-800-METTLER

METTLER TOLEDO

ISO 9001 Registered

ANSI/NCSL Z540-1 Accrédité

Accrédité par l'American Association for Laboratory Accreditation (A2LA)

CERT.CALIBRATION #1902.02

Certificat d'étalonnage

Client

Société :	SBI Fabricant De Poeles		
Adresse :	250 Rue de Copenhague		
Ville :	Saint-Augustin-De-Desmaures	*État/Province :*	Quebec
Code postal :	G3A 2H3	Astea Customer ID:	300276257

Instrument

Constructeur :	Weigh-Tronix	*Modèle de terminal :*	IND560
Modèle :	DSL 4848-05	*# série du terminal:*	00927386KL
No de série :	B00927386KL	*# série de l'imprimant*	N/A
Capacité :	500 kg		N/A
Résolution :	0,02 kg	*Nbre de Divisions:*	25000
Classe :	III	*Procédure utilisée :*	NIST Handbook 44
No./ID d'inventaire:	SBI-014		
Procédure:	Le présent certificat est émis conformément aux conditions de certification accordées par l'A2LA, en vertu de la norme ISO/IEC 17025. A2LA a évalué la capacité de mesure du laboratoire et la traçabilité des normes nationales reconnues.		

Date de calibrage :	1-avr-2016	*Date, prochaine Cal.*	31-mars-2017
Signataire autorisé (A2LA) :	Dany Careau	*Signature:*	ELECTRONIC SIGNATURE

Étalons de travail

Retracabilité: Les poids de test utilisés se réfèrent au National Institute of Standards and Technology.

Jeu de poids no :	*Traçabilité NIST No.:*	*Classe ASTM/OIML*	*Date d'étalonnage :*	*Date proch. étalonnage*
0718	M15-050	M1	22-avr-2015	22-avr-2016
142	MT00997	F1	7-mai-2014	30-avr-2016
Q1	1415126	M1	1-juin-2015	1-juin-2016

© METTLER TOLEDO

Toute reproduction partielle du certificat est interdite, sous réserve du consentement écrit préalable du laboratoire émetteur.

METTLER TOLEDO

Résultats de mesure

La température : 22 °C

Les conditions ambiantes ont été vérifiées afin d'assurer l'exactitude de l'étalonnage.

Test de variation

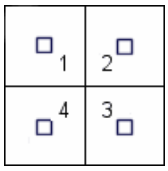

		Avant Réglage	*Après Réglage*
Poids Appliqués	*Position*	*Valeur lue*	*Valeur lue*
1: 100 kg	*Position 1*	99,92 kg	99,96 kg
2: 100 kg	*Position 2*	99,98 kg	100,04 kg
3: 100 kg	*Position 3*	99,94 kg	99,98 kg
4: 100 kg	*Position 4*	99,94 kg	99,98 kg
Erreur maximum :		0,08 kg	0,08 kg
Max Erreur Admissible :		0,10 kg	0,1 kg

Linéarité

	Avant réglage					
	Poids Appliqués	*Valeur lue*	*Erreur*		*Erreur admissible*	*Dans la Tolérance*
Zero 1,00	0,00 kg	0,00 kg	0,00 kg	0 d	1 d	OUI
2,00	40,00 kg	40,00 kg	0,00 kg	0 d	2 d	OUI
3,00	80,00 kg	79,98 kg	-0,02 kg	1 d	3 d	OUI
4,00	120,00 kg	119,96 kg	-0,04 kg	2 d	5 d	OUI
5,00	160,00 kg	159,96 kg	-0,04 kg	2 d	5 d	OUI
Max 6,00	200,00 kg	199,94 kg	-0,06 kg	3 d	5 d	OUI

☐ Méthode de substitution utilisée

© METTLER TOLEDO

Toute reproduction partielle du certificat est interdite, sous réserve du consentement écrit préalable du laboratoire émetteur.

	Après réglage					
	Poids Appliqués	*Valeur lue*	*Erreur*		*Erreur admissible*	*Dans la Tolérance*
Zero 1,00	0,00 kg	0,00 kg	0,00 kg	0 d	1 d	OUI
2,00	40,00 kg	40,00 kg	0,00 kg	0 d	2 d	OUI
3,00	80,00 kg	80,00 kg	0,00 kg	0 d	3 d	OUI
4,00	120,00 kg	120,00 kg	0,00 kg	0 d	5 d	OUI
5,00	160,00 kg	160,00 kg	0,00 kg	0 d	5 d	OUI
Max 6,00	200,00 kg	200,00 kg	0,00 kg	0 d	5 d	OUI

☐ Méthode de substitution utilisée

Un réglage de la balance a été requis
Si non, les résultats "avant réglage" correspondent aux résultats tel que laissé.

☑ **OUI** ☐ **NON**

Répétabilité

Poids appliqués : 100,00 kg

	Chargé	*Vide*	*Différence*
1	100,00 kg	0,00 kg	100 kg
2	100,00 kg	0,00 kg	100 kg
3	100,00 kg	0,00 kg	100 kg
	Erreur maximale :	0,00 kg	0,0 d
	Tolérance :	0,10 kg	5 d

Incertitude

Mesure de l'incertitude = 0,012 kg

L'incertitude de mesure représente les incertitudes étendues selon un facteur de sécurité K=2 générant un niveau de confiance approximatif de 95 %. Des dispositions doivent être prises en matière d'environnement au lieu d'étalonnage, d'incertitude induite par l'article en étalonnage et d'effets indésirables causés par le transport du matériel d'étalonnage. Ces facteurs pourraient entraîner une incertitude plus grande que le CMC.

Remarques

Aucune.

© METTLER TOLEDO

Toute reproduction partielle du certificat est interdite, sous réserve du consentement écrit préalable du laboratoire émetteur.

Dry Gas Metering System Calibration
Y factor for Method 5G sampling

Manufacturer:	American Meter Company
Model:	DTM-200A
Serial Number:	90R054300

Average Gas Meter y Factor
1.003

Calibration Date:	03-30-16
Calibrated by:	Vincent Pelletier
Calibration Frequency:	6-months
Next Calibration Due:	03-08-16
Instrument Range:	1.000 cfm
Standard Temp.:	73 oF
Standard Press.:	29.92 "Hg
Barometric Press.:	30.09 "Hg
Signature/Date:	Vincent Pelletier 2016-03-30

Previous Calibration Comparision

Date	2015-09-08	Acceptable Deviation (5%)	Deviation
y Factor	0.994	0.0497	0.009
Acceptance			

Current Calibration

Acceptable y Deviation	0.050
Maximum y Deviation	0.023
Acceptance	Acceptable

Reference Standard *		
Standard Calibrator	Model	Standard Test Meter
	S/N	07J264834
	Calib. Date	Sept. 02, 2015
	Calib. Value	0.9931 y factor (ref)

Calibration Parameters	Run 1	Run 2	Run 3
Vacuum ("Hg)	0.00	0.00	0.00
dH ("H2O)	0.00	0.00	0.00
Initial Reference Meter	579.840	584.385	589.425
Final Reference Meter	584.385	589.425	614.643
Initial DGM	467.453	471.857	476.954
Final DGM	471.857	476.954	501.989
Temp. Ref. Meter (°F), Tr	66.6	70.9	71.9
Temperature DGM (°F), Td	67.0	69.5	73.4
Time (Minutes)	102.0	40.0	91.0
Net Volume Ref. Meter, Vr	4.545	5.040	25.218
Net Volume DGM, Vd	4.404	5.097	25.035
Gas Meter y Factor =	**1.026**	**0.979**	**1.003**
Gas Meter y Factor Deviation (from avg.)	0.023	0.023	0.000
Orifice dH@	**0.00**	**0.00**	**0.00**
Orifice dH@ Deviation (from avg.)	0.000	0.000	0.000

where: 0.043176471

1. Deviation = |Average value for all runs - current run value|
2. y = [Vr x (y factor (ref)) x (Pb) x (Td + 460) / [Vd x (Pb + (dH / 13.6)) x (Tr + 460]
3. dH@ = 0.0317 x dH / (Pb (Td + 460)) x [(Tr + 460) x time) / Vr]^2

* Reference calibration is traceable to NIST through NIST Test # 40674, Kimble ASTM E1272

Dry Gas Metering System Calibration
Y factor for Method 5G sampling

Manufacturer:	American Meter Company
Model:	DTM-200A
Serial Number:	98Z332226

Average Gas Meter y Factor
1.006

Calibration Date:	03-30-16
Calibrated by:	Vincent Pelletier
Calibration Frequency:	6-months
Next Calibration Due:	09-26-16
Instrument Range:	1.000 cfm
Standard Temp.:	73 oF
Standard Press.:	29.92 "Hg
Barometric Press.:	30.09 "Hg
Signature/Date:	Vincent Pelletier 2016-03-30

Previous Calibration Comparision

Date	2015-09-08	Acceptable	
		Deviation (5%)	Deviation
y Factor	1.000	0.05	0.006
Acceptance			

Current Calibration

Acceptable y Deviation	0.050
Maximum y Deviation	0.014
Acceptance	Acceptable

Reference Standard *		
Standard Calibrator	Model	Standard Test Meter
	S/N	07J264834
	Calib. Date	Sept. 02, 2015
	Calib. Value	0.9931 y factor (ref)

Calibration Parameters	Run 1	Run 2	Run 3
Vacuum ("Hg)	0.00	0.00	0.00
dH ("H2O)	0.00	0.00	0.00
Initial Reference Meter	614.643	667.231	672.581
Final Reference Meter	667.231	672.581	692.897
Initial DGM	956.596	1008.026	1013.254
Final DGM	1008.026	1013.254	1033.598
Temp. Ref. Meter (°F), Tr	73.3	72.2	69.0
Temperature DGM (°F), Td	73.8	69.4	69.2
Time (Minutes)	1028.0	35.0	67.0
Net Volume Ref. Meter, Vr	52.588	5.350	20.316
Net Volume DGM, Vd	51.43	5.228	20.344
Gas Meter y Factor =	**1.016**	**1.011**	**0.992**
Gas Meter y Factor Deviation (from avg.)	0.010	0.004	0.014
Orifice dH@	**0.00**	**0.00**	**0.00**
Orifice dH@ Deviation (from avg.)	0.000	0.000	0.000

where: 0.050029183

1. Deviation = |Average value for all runs - current run value|
2. y = [Vr x (y factor (ref)) x (Pb) x (Td + 460) / [Vd x (Pb + (dH / 13.6)) x (Tr + 460]
3. dH@ = 0.0317 x dH / (Pb (Td + 460)) x [(Tr + 460) x time) / Vr]^2

* Reference calibration is traceable to NIST through NIST Test # 40674, Kimble ASTM E1272

Ulrich Métrologie inc.
Ulrich Metrology Inc.
9912, Côte-de-Liesse
Montréal (Québec) H8T 1A1

Tél. (514) 631-6653
Fax (514) 631-6122
info@ulrich.ca
www.ulrich.ca

ACCREDITATION ISO 17025
SCC Scope Number 220

CALIBRATION CERTIFICATE

Certificate no.:	525294	**Calibration date:**	April 07, 2016
Identification:	SBI-096	**Certificate issued:**	April 07, 2016
Description:	CALIBRATOR, OMEGA CL23A	**Interval:**	12 months
Size:	TC K/J/T	**Due date:**	April 07, 2017
Manufacturer:	OMEGA	**Procedure no.:**	MET/CAL
Model no.:	CL23A	**Environment:**	CLAS Type 2 Laboratory
Serial no.:	T-256137	**Temperature:**	23 ± 2°C
		Humidity:	35 - 55% RH
		Metrologist:	YUK

Property of: SBI
250 RUE DE COPENHAGUE
ST-AUGUSTIN-DE-DESMAURES, QC G3A 2H3

Approved by: David Llorens, Quality Manager

This calibration certificate is issued in accordance with the applicable requirements of ISO/IEC 17025 and Ulrich Metrology's quality manual QM-09 Revision 9. Measurement results provided are traceable to either the National Research Council Canada (NRC), the National Institute of Standards and Technology (NIST), a national laboratory of another country signatory to the CIPM Mutual Recognition Arrangement (MRA), or a calibration laboratory accredited by an accrediting body with which Canada has an equivalence agreement.

CALIBRATION STANDARDS

See notes below.

MEASUREMENT UNCERTAINTY

The above listed instrument meets or exceeds all specifications as stated in the reference procedure, unless noted otherwise. For measurement results associated with the conformance to a tolerance, the uncertainty in the measurement system did not exceed 25% (4:1 test uncertainty ratio) of the acceptable tolerance for each characteristic calibrated, unless otherwise noted in the report.

CALIBRATION DATA

See next page for measurement results.

Notes:

9V battery replaced.

The Calibration Laboratory Assessment Service (CLAS) of the National Research Council of Canada (NRC) has assessed and certified specific calibration capabilities of this laboratory and traceability to the International System of Units (SI) or to standards acceptable to the CLAS program. This certificate of calibration is issued in accordance with the conditions of certification granted by CLAS and the conditions of accreditation granted by the Standards Council of Canada (SCC). Neither CLAS nor SCC guarantee the accuracy of individual calibrations by accredited laboratories.

© Copyright of this Calibration Certificate CE-03-03 is owned by Ulrich Metrology Inc. and may not be reproduced other than in full except with the prior approval of Ulrich Metrology Inc.

166727 P

Ulrich Métrologie inc.
Ulrich Metrology inc.
9912, Côte-de-Liesse
Montréal (Québec) H8T 1A1

Tél. (514) 631-6653
Fax (514) 631-6122
info@ulrich.ca
www.ulrich.ca

CALIBRATION DATA

Certificate no.: 525294
Identification: SBI-096
Description: CALIBRATOR THERMOMETER
Serial no.: T-256137
Procedure: Omega CL23A: 5520A-M

Result: PASS
Condition: FOUND-LEFT

CALIBRATION STANDARDS

Identification	Description	Manufacturer	Model no.	Cal. Date	Due Date
7870009	CALIBRATOR	FLUKE	5520A	2016/01/06	2017/01/31

MEASUREMENT RESULTS (Per MET/CAL)

PARAMETER	TRUE VALUE	TEST RESULT	ACCEPTANCE LIMITS LOW	HIGH	PASS/ FAIL	TUR
Temperature measurements are performed by electrical simulation.						
DISPLAY CALIBRATION						
Did all segments of the display illuminate?						
Result of Operator Evaluation					PASS	
THERMOMETER CALIBRATION						
K Type Thermocouple						
-200.0degF		-200.1	-201.0	-199.0	PASS	1.7
-60.0degF		-59.9	-61.0	-59.0	PASS	3.1
-40.0degF		-40.0	-40.5	-39.5	PASS	1.5
32.0degF		31.9	31.5	32.5	PASS	1.7
1240.0degF		1240.0	1239.5	1240.5	PASS	1.1
1260.0degF		1260.0	1259.5	1260.5	PASS	1.1
2500.0degF		2500.0	2499.0	2501.0	PASS	1.4
J Type Thermocouple						
-200.0degF		-200.3	-201.0	-199.0	PASS	2.1
-60.0degF		-60.0	-61.0	-59.0	PASS	3.5
-40.0degF		-40.1	-40.5	-39.5	PASS	1.7
32.0degF		31.9	31.5	32.5	PASS	2.0
1240.0degF		1239.9	1239.5	1240.5	PASS	1.6
1260.0degF		1259.9	1259.5	1260.5	PASS	1.6
1400.0degF		1399.8	1399.4	1400.6	PASS	1.8
T Type Thermocouple						
-200.0degF		-199.9	-201.0	-199.0	PASS	2.3
-60.0degF		-59.8	-61.0	-59.0	PASS	2.3
-40.0degF		-40.0	-40.5	-39.5	PASS	1.2
32.0degF		32.0	31.5	32.5	PASS	1.7
750.0degF		749.9	749.5	750.5	PASS	2.0
CALIBRATOR CALIBRATION						
K Type Thermocouple						
-200.0degF		-199.7	-201.0	-199.0	PASS	1.7
-60.0degF		-59.9	-61.0	-59.0	PASS	3.1
-40.0degF		-39.9	-40.5	-39.5	PASS	1.5
32.0degF		32.0	31.5	32.5	PASS	1.7

Ulrich Métrologie inc.
Ulrich Metrology inc.
9912, Côte-de-Liesse
Montréal (Québec) H8T 1A1

Tél. (514) 631-6663
Fax (514) 631-6122
info@ulrich.ca
www.ulrich.ca

PARAMETER	TRUE VALUE	TEST RESULT	ACCEPTANCE LIMITS LOW	HIGH	PASS/ FAIL	TUR
1240.0degF		1240.2	1239.5	1240.5	PASS	1.1
1260.0degF		1260.2	1259.5	1260.5	PASS	1.1
2500.0degF		2500.5	2499.0	2501.0	PASS	1.4
J Type Thermocouple						
-200.0degF		-200.2	-201.0	-199.0	PASS	2.1
-60.0degF		-60.2	-61.0	-59.0	PASS	3.5
-40.0degF		-40.1	-40.5	-39.5	PASS	1.7
32.0degF		31.8	31.5	32.5	PASS	2.0
1240.0degF		1240.1	1239.5	1240.5	PASS	1.6
1260.0degF		1260.1	1259.5	1260.5	PASS	1.6
1400.0degF		1399.9	1399.4	1400.6	PASS	1.8
T Type Thermocouple						
-200.0degF		-200.3	-201.0	-199.0	PASS	2.3
-60.0degF		-60.3	-61.0	-59.0	PASS	2.3
-40.0degF		-40.1	-40.5	-39.5	PASS	1.2
32.0degF		31.7	31.5	32.5	PASS	1.7
750.0degF		749.8	749.5	750.5	PASS	2.0

End of Test Data

MICRO PRECISION CALIBRATION
22835 INDUSTRIAL PLACE
GRASS VALLEY CA 95949
530-268-1860

Calibration Laboratory
CERT # 935.01

Certificate of Calibration

Date: Apr 22, 2016 **Cert No. 222200812318776**

Customer:

STOVE BUILDERS INTERNATIONAL INC.

PORTES 11-12
250 DE COPENHAGUE
SAINT-AUGUSTIN-DE-DESMAURES QC G3A 2H3

MPC Control #:	DA5991	Work Order #:	SAC-70078354
Asset ID:	SBI-097	Purchase Order #:	REWORK
Gage Type:	ANEMOMETER	Serial Number:	79977
Manufacturer:	EUROTRON INSTRUMENTS	Department:	N/A
Model Number:	VT 50	Performed By:	ERICK CONKLIN
Size:	N/A	Received Condition:	IN TOLERANCE
Temp/RH:	68.0°F / 43.0%	Returned Condition:	IN TOLERANCE
		Cal. Date:	April 22, 2016
		Cal. Interval:	12 MONTHS
		Cal. Due Date:	April 22, 2017

Calibration Notes:

Test Points

Seq.	Description	Standard	Tolerance -	Tolerance +	As Found	As Left	UOM	Result	Uncertainty
1	Temperature Tested at:(Deg F)	-4.0	-4.7	-3.3	-3.7	-3.7	Deg F	Passed	0.05
2	Tested at: (Deg F)	45.0	43.5	46.5	45.9	45.9	Deg F	Passed	0.05
3	Tested at: (Deg F)	90.0	87.6	92.4	91.2	91.2	Deg F	Passed	0.05
4	Tested at: (Deg F)	135.0	131.7	138.3	133.2	133.2	Deg F	Passed	0.05
5	Tested at: (Deg F)	176.0	171.8	180.1	173.4	173.4	Deg F	Passed	0.05
6	Air Velocity Tested At:	500	473	527	489	489	Fpm	Passed	14.5
7	Air Velocity Tested At:	1,000	930	1070	982	982	Fpm	Passed	29
8	Air Velocity Tested At:	2,000	1900	2100	1,984	1,984	Fpm	Passed	58
9	Air Velocity Tested At:	3,000	2870	3130	2,952	2,952	Fpm	Passed	87
10	Air Velocity Tested At:	4,000	3840	4160	4,020	4,020	Fpm	Passed	80
11	Air Velocity Tested At:	5,000	4810	5190	4,879	4,879	Fpm	Passed	100
12	Air Velocity Tested At:	6,000	5780	6220	5,963	5,963	Fpm	Passed	120

Calibrating Technician: Erick Conklin

ERICK CONKLIN

QC Approval: Robert S Means

Robert Means

The reported expanded uncertainty of measurement is stated as the standard uncertainty of measurement multiplied by the coverage factor k=2, which for normal distribution corresponds to a coverage probability of approximately 95%. The standard uncertainty of measurement has been determined in accordance with EA's Publication and NIST Technical Note 1297, 1994 Edition. Services rendered comply with ISO 17025:2005, ANSI/NCSL Z540-1, MPC Quality Manual, MPC CSD and with customer purchase order instructions.

Calibration cycles and resulting due dates were submitted/approved by the customer. Any number of factors may cause an instrument to drift out of tolerance before the next scheduled calibration. Recalibration cycles should be based on frequency of use, environmental conditions and customer's established systematic accuracy. The information on this report, pertains only to the instrument identified.

All standards are traceable to SI through the National Institute of Standards and Technology (NIST) and/or recognized national or international standards laboratories. Services rendered include proper manufacturer's service instruction and are warranted for no less than thirty (30) days. This report may not be reproduced in part or in a whole without the prior written approval of the issuing MPC lab.

(CERT, Rev 3)

MICRO PRECISION CALIBRATION INC.

MICRO PRECISION CALIBRATION
22835 INDUSTRIAL PLACE
GRASS VALLEY CA 95949
530-268-1860

ilac-MRA A2LA ACCREDITED
Calibration Laboratory
CERT # 935.01

Certificate of Calibration

Date: Apr 22, 2016 **Cert No. 222200812318776**

Standards Used to Calibrate Equipment

I.D.	Description.	Model	Serial	Manufacturer	Cal. Due Date	Traceability #
CR6800	HUMIDITY GENERATOR/ ENVIRONMENTAL CHAMBER	2500	0012263	THUNDER SCIENTIFIC CORPORATION	Aug 7, 2016	222008122801952
CL7456	STANDARD PLATINUM RESISTANCE THERMOMETER PROBE	5681	1595	FLUKE	Dec 4, 2016	A7B16006
CL7223	BLACK STACK	1560/2560	A07486/A07485/A07728	HART SCIENTIFIC, INC.	Nov 2, 2016	222008122718022
CJ5100	WIND TUNNEL WITH CONTROLLER	JS-500	375/305	INTERACTIVE INSTRUMENTS	Oct 29, 2016	222008122715516
AE2821	ANEMOMETER	AM-4822	N272316	LANDTEK	Oct 29, 2016	222008122715506

Procedures Used in this Event

Procedure Name	Description
CUSTOMER SPECIFICATIONS	Customer Specifications

Calibrating Technician: Erick Conklin
ERICK CONKLIN

QC Approval: Robert S Means
Robert Means

The reported expanded uncertainty of measurement is stated as the standard uncertainty of measurement multiplied by the coverage factor k=2, which for normal distribution corresponds to a coverage probability of approximately 95%. The standard uncertainty of measurement has been determined in accordance with EA's Publication and NIST Technical Note 1297, 1994 Edition. Services rendered comply with ISO 17025:2005, ANSI/NCSL Z540-1, MPC Quality Manual, MPC CSD and with customer purchase order instructions.

Calibration cycles and resulting due dates were submitted/approved by the customer. Any number of factors may cause an instrument to drift out of tolerance before the next scheduled calibration. Recalibration cycles should be based on frequency of use, environmental conditions and customer's established systematic accuracy. The information on this report, pertains only to the instrument identified.

All standards are traceable to SI through the National Institute of Standards and Technology (NIST) and/or recognized national or international standards laboratories. Services rendered include proper manufacturer's service instruction and are warranted for no less than thirty (30) days. This report may not be reproduced in part or in a whole without the prior written approval of the issuing MPC lab.

CERTIFICATE OF NIST TRACEABLE CALIBRATION

Calibration Certificate No: 51068

LABORATORY ACCREDITATION BUREAU a division of A-S-B
ACCREDITED ISO/IEC 17025
Certificate # L2115-1 Calibration

Customer Information

Customer: SBI St-Augustin

Address : 250, De Copenhague
Doors 11-12
St-Augustin-de-Desmaures

Customer PO #: 45864

Calibration Procedure Information

Procedure ID: GTP FLOW_INDI Revision #: 7 Revision Date: 1/6/2013

Calibration Standards Information

Graftel ID	Manufacturer	Model #	Description	CAL Due
10126	Graftel	N/A	LFE-D System	7/6/2016
10126-T	Graftel	9202	Temperature Sensor	8/17/2018
51202	Paroscientific	760-100A	Pressure, 100 Psia	8/17/2016
10127	Furness	352	Delta P	7/6/2016
60030	Paroscientific	760-100A	Pressure, 100 psia	5/7/2016
10159	HOBO	U12-011	Environment Monitor System	11/18/2015

Sensor Information

Manufacturer: American Meter Description: Gas Meter Method Used: Laminar

Model #: DTM-200A Rated Accuracy: ± 1 % of Reading Accuracy Specified By: AmericanMeter

Instrument ID#: SBI-103 Range: 0 to 250 scfh Condition: Functional

Serial #: 07J264834

Comments: Calibration Date: 09/02/2015

The instruments(s) listed on this certificate have been calibrated against standards traceable to the National Institue of Standards & Technology (NIST) or compared to nationally or internationally recognized consensus standards. The reported calibration uncertainty has a confidence level of 95% (k=2). A calibration uncertainty ratio of 4:1 was maintained unless required uncertainty is supported by analysis. Graftel, LLC. Quality Assurance System complies with applicable requirements of ISO/IEC-17025-2005, ANSI/NCSL Z540-I-1994 and ISO 9001: 2008. All results contained within this certificate relate only to item(s) calibrated. This certificate shall not be reproduced except in full and with the written consent of Graftel, LLC. Acceptance Criteria per Simple Acceptance Rule: Measurement Uncertainty is not applied to the measured value when in/out of tolerance statement is made.

Performed By: _____ Date: 9/2/2015

I.B. Caoili
Calibration Technician

GRAFTEL, LLC. 870 Cambridge Drive, Elk Grove Village, IL 60007 847.364.2600
www.graftel.com

ATTACHMENT TO CALIBRATION CERTIFICATE 51068
AS FOUND / AS LEFT DATA

Air Flow Rate From Standard, scfh	Air Vol From Standard, scf	Air Vol From Meter, cf	Air vol From Meter, scf	Diff Air Vol STD - METER scf	% Proof	Measurement Uncertainty, scf	STATUS
6.527	0.287	0.3	0.289	-0.002	99.138	0.002	Pass
15.052	0.967	1.0	0.969	-0.002	99.773	0.005	Pass
24.025	0.984	1.0	0.976	0.008	100.859	0.005	Pass
33.003	1.982	2.0	1.963	0.019	100.951	0.010	Pass
42.116	1.982	2.0	1.979	0.003	100.163	0.010	Pass

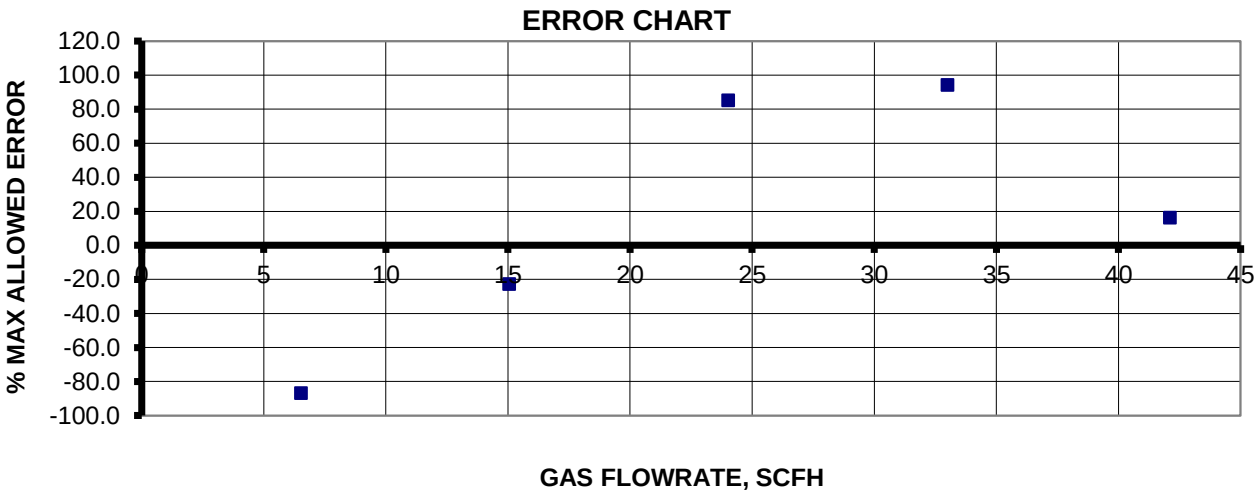

INSTRUMENT SPECIFICATIONS		
Test Gas	Air	
Standard Pressure,Meter	14.73	psia
Standard Temperature,Meter	60	F
Rated Accuracy	1	% Rding
Full Scale Flow Rate	250	scfh Natural Gas @ 1/2 inch WC
LABORATORY AMBIENT CONDITIONS		
Pressure	14.39	psia
Humidity	52.04	% RH
Temperature	71.40	F

Flow - Humidity - Temperature - Pressure - Design - Consulting - Engineering
NIST Traceable Calibration Data Sheet
Graftel, LLC. 870 Cambridge Drive, Elk Grove Village, IL.60007
P. 847-364-2600 F. 847-364-2899
www.graftel.com

Date: 2016-04-19

Equipment: SBI-153 Temperature: 70.2°F
Accuracy: 0.001 1 R.H.: 32.7%
Reference: SBI-194

S.D.	0.00	%	
R.M.U.	0.09	%	
O.M.U	**0.58**	**%**	
	Ave A.D.	0.27	%
Standard	Reading	A.D.	
MΩ			
1.100	1.097	0.27	
1.100	1.097	0.27	
1.100	1.097	0.27	

S.D.	0.01	%	
R.M.U.	0.83	%	
O.M.U	**2.00**	**%**	
	Ave A.D.	0.56	%
Standard	Reading	A.D.	
120	119	0.83	
120	120	0.00	
120	119	0.83	

Vincent Pelletier

Technician: Vincent Pelletier

Ulrich Métrologie inc.
Ulrich Metrology Inc.
9912, Côte-de-Liesse
Montréal (Québec) H8T 1A1

Tél. (514) 631-6653
Fax (514) 631-6122
info@ulrich.ca
www.ulrich.ca

ACCREDITATION ISO 17025
SCC Scope Number 220

CALIBRATION CERTIFICATE

Certificate no.:	525229	**Calibration date:**	April 07, 2016
Identification:	SBI-194	**Certificate issued:**	April 07, 2016
Description:	MULTIMETER, RADIO SHACK 22-168A	**Interval:**	12 months
Manufacturer:	RADIO SHACK	**Due date:**	April 07, 2017
Model no.:	22-168A	**Procedure no.:**	MET/CAL
Serial no.:	FC388201	**Environment:**	CLAS Type 2 Laboratory
		Temperature:	23 ± 2°C
		Humidity:	35 - 55% RH
		Metrologist:	NFS

Property of: SBI
250 RUE DE COPENHAGUE
ST-AUGUSTIN-DE-DESMAURES, QC G3A 2H3

Approved by: David Llorens, Quality Manager

This calibration certificate is issued in accordance with the applicable requirements of ISO/IEC 17025 and Ulrich Metrology's quality manual QM-09 Revision 9. Measurement results provided are traceable to either the National Research Council Canada (NRC), the National Institute of Standards and Technology (NIST), a national laboratory of another country signatory to the CIPM Mutual Recognition Arrangement (MRA), or a calibration laboratory accredited by an accrediting body with which Canada has an equivalence agreement.

CALIBRATION STANDARDS

See notes below.

MEASUREMENT UNCERTAINTY

The above listed instrument meets or exceeds all specifications as stated in the reference procedure, unless noted otherwise. For measurement results associated with the conformance to a tolerance, the uncertainty in the measurement system did not exceed 25% (4:1 test uncertainty ratio) of the acceptable tolerance for each characteristic calibrated, unless otherwise noted in the report.

CALIBRATION DATA

See next page for measurement results.

Notes:

1.5A fuse was received blown. It was replaced.

The Calibration Laboratory Assessment Service (CLAS) of the National Research Council of Canada (NRC) has assessed and certified specific calibration capabilities of this laboratory and traceability to the International System of Units (SI) or to standards acceptable to the CLAS program. This certificate of calibration is issued in accordance with the conditions of certification granted by CLAS and the conditions of accreditation granted by the Standards Council of Canada (SCC). Neither CLAS nor SCC guarantee the accuracy of individual calibrations by accredited laboratories.

© Copyright of this Calibration Certificate CE-03-03 is owned by Ulrich Metrology Inc. and may not be reproduced other than in full except with the prior approval of Ulrich Metrology Inc.

Ulrich Métrologie inc.
Ulrich Metrology inc.
9912, Côte-de-Liesse
Montréal (Québec) H8T 1A1

Tél. (514) 631-6663
Fax (514) 631-6122
info@ulrich.ca
www.ulrich.ca

CALIBRATION DATA

Certificate no.: 525229
Identification: SBI-194
Description: MULTIMETER
Serial no.: FC388201
Procedure: MICRONTA 22-168A: 5520A-M

Result: PASS
Condition: FOUND-LEFT

CALIBRATION STANDARDS

Identification	Description	Manufacturer	Model no.	Cal. Date	Due Date
8608002	CALIBRATOR	FLUKE	5520A	2016/03/02	2017/03/31

MEASUREMENT RESULTS (Per MET/CAL)

PARAMETER	TRUE VALUE	TEST RESULT	ACCEPTANCE LIMITS LOW	HIGH	PASS/ FAIL	TUR
DC VOLTAGE CALIBRATION						
200 mV Range						
190.0mV		189.9	187.8	192.2	PASS	
2V Range						
1.900V		1.898	1.878	1.922	PASS	
-1.900V		-1.897	-1.922	-1.878	PASS	
20V Range						
19.00V		18.99	18.78	19.22	PASS	
200V Range						
190.0V		190.1	187.8	192.2	PASS	
1000V Range						
950V		950	938	962	PASS	
AC VOLTAGE CALIBRATION						
200 mV Range						
190.0mV @ 60Hz		187.3	185.8	194.2	PASS	
2V Range						
1.900V @ 60Hz		1.872	1.858	1.942	PASS	
20V Range						
19.00V @ 60Hz		18.73	18.58	19.42	PASS	
200V Range						
190.0V @ 60Hz		187.6	185.8	194.2	PASS	
750V Range						
700V @ 60Hz		691	678	723	PASS	
FREQUENCY CALIBRATION						
1.900kHz @ 5V		1.904	1.809	1.990	PASS	
RESISTANCE CALIBRATION						
200 Ohm Range						
190.0 Ohm		190.3	186.8	193.2	PASS	
2 kOhm Range						
1.900 kOhm		1.900	1.870	1.930	PASS	
20 kOhm Range						
19.00 kOhm		18.98	18.70	19.30	PASS	
200 kOhm Range						
190.0 kOhm		190.1	187.0	193.0	PASS	
2 MOhm Range						

ULRICH
Ulrich Métrologie inc.
Ulrich Metrology inc.
9912, Côte-de-Liesse
Montréal (Québec) H8T 1A1
Tél. (514) 631-6663
Fax (514) 631-6122
info@ulrich.ca
www.ulrich.ca

PARAMETER	TRUE VALUE	TEST RESULT	ACCEPTANCE LIMITS LOW	HIGH	PASS/ FAIL	TUR
1.900 MOhm		1.901	1.870	1.930	PASS	
20 MOhm Range						
19.00 MOhm		19.01	18.50	19.50	PASS	
2000 MOhm Range						
1100 MOhm		1107	935	1266	PASS	
CONTINUITY CALIBRATION						
Is the beeper on when 30 Ohms resistance is applied?						
Result of Operator Evaluation					PASS	
Is the beeper off when 100 Ohms resistance is applied?						
Result of Operator Evaluation					PASS	
DC CURRENT CALIBRATION						
200 µA Range						
190.0uA		189.7	187.0	193.0	PASS	
2 mA Range						
1.900mA		1.899	1.870	1.930	PASS	
20 mA Range						
19.00mA		19.06	18.47	19.54	PASS	
200 mA Range						
190.0mA		191.7	184.7	195.3	PASS	
20 A Range						
10.00A		9.89	9.30	10.70	PASS	
AC CURRENT CALIBRATION						
200 µA Range						
190.0uA @ 60Hz		187.0	184.8	195.2	PASS	
2 mA Range						
1.900mA @ 60Hz		1.897	1.848	1.952	PASS	
20 mA Range						
19.00mA @ 60Hz		18.80	18.15	19.85	PASS	
200 mA Range						
190.0mA @ 60Hz		188.9	181.5	198.5	PASS	
20 A Range						
10.00A @ 60Hz		9.92	8.98	11.02	PASS	
CAPACITANCE CALIBRATION						
200 nF Range						
190.0nF		188.8	180.9	199.1	PASS	
20 µF Range						
19.00uF		18.48	17.30	20.70	PASS	
200 µF Range						
190.0uF		183.6	172.9	207.1	PASS	

End of Test Data

Rapport d'étalonnage No. CA0003-509-040116

Mettler Toledo
Service Business Unit Industrial
1900 Polaris Parkway
Columbus, Ohio 43240
1-800-METTLER

METTLER TOLEDO

ISO 9001 Registered

ANSI/NCSL Z540-1 Accrédité

Accrédité par l'American Association for Laboratory Accreditation (A2LA)

CERT.CALIBRATION #1902.02

Certificat d'étalonnage

Client

Société :	SBI Fabricant De Poeles		
Adresse :	250 Rue de Copenhague		
Ville :	Saint-Augustin-De-Desmaures	*État/Province :*	Quebec
Code postal :	G3A 2H3	Astea Customer ID:	300276257

Instrument

Constructeur :	SARTORIUS	*Modèle de terminal :*	N/A
Modèle :	TE214S	*# série du terminal:*	N/A
No de série :	25851066	*# série de l'imprimant*	N/A
Capacité :	210 g		N/A
Résolution :	0,0001 g	*Nbre de Divisions:*	2100000
Classe :	I	*Procédure utilisée :*	NIST Handbook 44
No./ID d'inventaire:	SBI-206		
Procédure:	Le présent certificat est émis conformément aux conditions de certification accordées par l'A2LA, en vertu de la norme ISO/IEC 17025. A2LA a évalué la capacité de mesure du laboratoire et la traçabilité des normes nationales reconnues.		

Date de calibrage :	1-avr-2016	*Date, prochaine Cal.*	31-mars-2017
Signataire autorisé (A2LA) :	Dany Careau	*Signature:*	ELECTRONIC SIGNATURE

Étalons de travail

Retracabilité: Les poids de test utilisés se réfèrent au National Institute of Standards and Technology.

Jeu de poids no :	*Traçabilité NIST No.:*	*Classe ASTM/OIML*	*Date d'étalonnage :*	*Date proch. étalonnage*
0718	M15-050	M1	22-avr-2015	22-avr-2016
142	MT00997	F1	7-mai-2014	30-avr-2016
Q1	1415126	M1	1-juin-2015	1-juin-2016

© METTLER TOLEDO

Toute reproduction partielle du certificat est interdite, sous réserve du consentement écrit préalable du laboratoire émetteur.

METTLER TOLEDO

Résultats de mesure

La température : 22 °C

Les conditions ambiantes ont été vérifiées afin d'assurer l'exactitude de l'étalonnage.

Test de variation

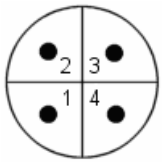

		Avant Réglage
Poids Appliqués	*Position*	*Valeur lue*
1: 50 g	*Position 1*	50,0001 g
2: 50 g	*Position 2*	50,0000 g
3: 50 g	*Position 3*	50,0001 g
4: 50 g	*Position 4*	50,0002 g
Erreur maximum :		0,0002 g
Max Erreur Admissible :		0,0003 g

Linéarité

	Avant réglage					
	Poids Appliqués	*Valeur lue*	*Erreur*		*Erreur admissible*	*Dans la Tolérance*
Zero 1,00	0,0000 g	0,0000 g	0,0000 g	0 d	1 d	OUI
2,00	0,1000 g	0,1000 g	0,0000 g	0 d	1 d	OUI
3,00	1,0000 g	0,9999 g	-0,0001 g	1 d	1 d	OUI
4,00	10,0000 g	9,9999 g	-0,0001 g	1 d	2 d	OUI
5,00	50,0000 g	50,0001 g	0,0001 g	1 d	3 d	OUI
6,00	100,0000 g	99,9999 g	-0,0001 g	1 d	3 d	OUI
7,00	150,0000 g	149,9998 g	-0,0002 g	2 d	3 d	OUI
Max 8,00	200,0000 g	200,0001 g	0,0001 g	1 d	3 d	OUI

☐ Méthode de substitution utilisée

Un réglage de la balance a été requis
Si non, les résultats "avant réglage" correspondent aux résultats tel que laissé.

☐ **OUI** ☑ **NON**

© METTLER TOLEDO

Toute reproduction partielle du certificat est interdite, sous réserve du consentement écrit préalable du laboratoire émetteur.

METTLER TOLEDO

Répétabilité

Poids appliqués : 10,0000 g

	Chargé	*Vide*	*Différence*
1	9,9999 g	0,0000 g	9,9999 g
2	10,0000 g	0,0000 g	10 g
3	9,9999 g	0,0000 g	9,9999 g
	Erreur maximale :	0,0001 g	1,0 d
	Tolérance :	0,0002 g	2 d

Incertitude

Mesure de l'incertitude = 0,00017 g

L'incertitude de mesure représente les incertitudes étendues selon un facteur de sécurité K=2 générant un niveau de confiance approximatif de 95 %. Des dispositions doivent être prises en matière d'environnement au lieu d'étalonnage, d'incertitude induite par l'article en étalonnage et d'effets indésirables causés par le transport du matériel d'étalonnage. Ces facteurs pourraient entraîner une incertitude plus grande que le CMC.

Remarques

Aucune.

© METTLER TOLEDO

Toute reproduction partielle du certificat est interdite, sous réserve du consentement écrit préalable du laboratoire émetteur.

Ulrich Métrologie inc.
Ulrich Metrology Inc.
9912, Côte-de-Liesse
Montréal (Québec) H8T 1A1

Tél. (514) 631-6653
Fax (514) 631-6122
info@ulrich.ca
www.ulrich.ca

ACCREDITATION ISO 17025

CALIBRATION CERTIFICATE

Certificate no.:	496310	**Calibration date:**	October 14, 2015
Identification:	SBI-213	**Certificate issued:**	October 14, 2015
Description:	THERMO-HYGROMETER, AMPROBE TH-3	**Interval:**	12 months
Manufacturer:	AMPROBE	**Due date:**	October 14, 2016
Model no.:	TH-3	**Procedure no.:**	MET/CAL
Serial no.:	101004044	**Environment:**	CLAS Type 2 Laboratory
		Temperature:	23 ± 2°C
		Humidity:	35 - 55% RH
		Metrologist:	NFS

Property of: SBI
250 RUE DE COPENHAGUE
ST-AUGUSTIN-DE-DESMAURES, QC G3A 2H3

Approved by: David Llorens, Quality Manager

This calibration certificate is issued in accordance with the applicable requirements of ISO/IEC 17025 and Ulrich Metrology's quality manual QM-09 Revision 9. Measurement results provided are traceable to either the National Research Council Canada (NRC), the National Institute of Standards and Technology (NIST), a national laboratory of another country signatory to the CIPM Mutual Recognition Arrangement (MRA), or a calibration laboratory accredited by an accrediting body with which Canada has an equivalence agreement.

CALIBRATION STANDARDS

See notes below.

MEASUREMENT UNCERTAINTY

The above listed instrument meets or exceeds all specifications as stated in the reference procedure, unless noted otherwise. For measurement results associated with the conformance to a tolerance, the uncertainty in the measurement system did not exceed 25% (4:1 test uncertainty ratio) of the acceptable tolerance for each characteristic calibrated, unless otherwise noted in the report.

CALIBRATION DATA

See next page for measurement results.

Notes:

EQUIPMENT RECEIVED OUT OF SPECIFICATIONS:

High humidity is out of tolerance @80% (reading of 75.1% instead of 77% minimum).
No adjustment. No support from manufacturer.

LIMITED CALIBRATION

© Copyright of this Calibration Certificate CE-03-03 is owned by Ulrich Metrology Inc. and may not be reproduced other than in full except with the prior approval of Ulrich Metrology Inc.

226673 L

Ulrich Métrologie inc.
Ulrich Metrology inc.
9912, Côte-de-Liesse
Montréal (Québec) H8T 1A1

Tél. (514) 631-6663
Fax (514) 631-6122
info@ulrich.ca
www.ulrich.ca

CALIBRATION DATA

Certificate no.: 496310
Identification: SBI-213
Description: THERMO-HYGROMETER
Serial no.: 101004044
Procedure: Amprobe TH-3: 2500ST-LT-M

Result: PASS
Condition: FOUND-LEFT

CALIBRATION STANDARDS

Identification	Description	Manufacturer	Model no.	Cal. Date	Due Date
1304953	HUMIDITY GENERATOR	THUNDER SCIENTIFIC	2500ST-LT	2015/06/19	2016/06/30

MEASUREMENT RESULTS (Per MET/CAL)

PARAMETER	TRUE VALUE	TEST RESULT	ACCEPTANCE LIMITS LOW	HIGH	PASS/ FAIL	TUR
TEMPERATURE CALIBRATION						
23°C						
23.01degC		23.30	22.21	23.81	PASS	
RELATIVE HUMIDITY CALIBRATION AT 23°C						
20% RH						
20.01%		19.00	17.01	23.01	PASS	
50% RH						
50.02%		48.40	47.02	53.02	PASS	
80% RH						
80.00%		75.10	77.00	83.00	FAIL	

End of Test Data

Rapport d'étalonnage No. CA0003-504-040116

Mettler Toledo
Service Business Unit Industrial
1900 Polaris Parkway
Columbus, Ohio 43240
1-800-METTLER

METTLER TOLEDO

ISO 9001 Registered

ANSI/NCSL Z540-1 Accrédité

Accrédité par l'American Association for Laboratory Accreditation (A2LA)

CERT.CALIBRATION #1902.02

Certificat d'étalonnage

Client

Société :	SBI Fabricant De Poeles		
Adresse :	250 Rue de Copenhague		
Ville :	Saint-Augustin-De-Desmaures	*État/Province :*	Quebec
Code postal :	G3A 2H3	Astea Customer ID:	300276257

Instrument

Constructeur :	Ohaus	*Modèle de terminal :*	N/A
Modèle :	FD15	*# série du terminal:*	N/A
No de série :	B144397174	*# série de l'imprimant*	N/A
Capacité :	15000 g		N/A
Résolution :	1 g	*Nbre de Divisions:*	15000
Classe :	III	*Procédure utilisée :*	NIST Handbook 44
No./ID d'inventaire:	SBI-222		
Procédure:	Le présent certificat est émis conformément aux conditions de certification accordées par l'A2LA, en vertu de la norme ISO/IEC 17025. A2LA a évalué la capacité de mesure du laboratoire et la traçabilité des normes nationales reconnues.		

Date de calibrage :	1-avr-2016	*Date, prochaine Cal.*	31-mars-2017
Signataire autorisé (A2LA) :	Dany Careau	*Signature:*	ELECTRONIC SIGNATURE

Étalons de travail

Retracabilité: Les poids de test utilisés se réfèrent au National Institute of Standards and Technology.

Jeu de poids no :	*Traçabilité NIST No.:*	*Classe ASTM/OIML*	*Date d'étalonnage :*	*Date proch. étalonnage*
0718	M15-050	M1	22-avr-2015	22-avr-2016
142	MT00997	F1	7-mai-2014	30-avr-2016
Q1	1415126	M1	1-juin-2015	1-juin-2016

© METTLER TOLEDO

Toute reproduction partielle du certificat est interdite, sous réserve du consentement écrit préalable du laboratoire émetteur.

Résultats de mesure

La température : 22 °C

Les conditions ambiantes ont été vérifiées afin d'assurer l'exactitude de l'étalonnage.

Test de variation

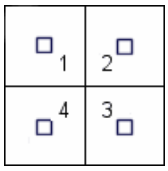

		Avant Réglage
Poids Appliqués	*Position*	*Valeur lue*
1: 5000 g	*Position 1*	5000 g
2: 5000 g	*Position 2*	5000 g
3: 5000 g	*Position 3*	5000 g
4: 5000 g	*Position 4*	5000 g
Erreur maximum :		0 g
Max Erreur Admissible :		5 g

Linéarité

	Avant réglage					
	Poids Appliqués	*Valeur lue*	*Erreur*		*Erreur admissible*	*Dans la Tolérance*
Zero 1,00	0 g	0 g	0 g	0 d	1 d	OUI
2,00	200 g	200 g	0 g	0 d	1 d	OUI
3,00	1000 g	1000 g	0 g	0 d	2 d	OUI
4,00	5000 g	5000 g	0 g	0 d	5 d	OUI
5,00	10000 g	10000 g	0 g	0 d	5 d	OUI
Max 6,00	15000 g	15000 g	0 g	0 d	5 d	OUI

☐ Méthode de substitution utilisée

Un réglage de la balance a été requis

Si non, les résultats "avant réglage" correspondent aux résultats tel que laissé.

☐ **OUI** ☑ **NON**

© METTLER TOLEDO

Toute reproduction partielle du certificat est interdite, sous réserve du consentement écrit préalable du laboratoire émetteur.

Répétabilité

Poids appliqués : 5000 g

	Chargé	*Vide*	*Différence*
1	5000 g	0 g	5000 g
2	5000 g	0 g	5000 g
3	5000 g	0 g	5000 g
	Erreur maximale :	0 g	0,0 d
	Tolérance :	5 g	5 d

Incertitude

Mesure de l'incertitude = 0,60 g

L'incertitude de mesure représente les incertitudes étendues selon un facteur de sécurité K=2 générant un niveau de confiance approximatif de 95 %. Des dispositions doivent être prises en matière d'environnement au lieu d'étalonnage, d'incertitude induite par l'article en étalonnage et d'effets indésirables causés par le transport du matériel d'étalonnage. Ces facteurs pourraient entraîner une incertitude plus grande que le CMC.

© METTLER TOLEDO

Toute reproduction partielle du certificat est interdite, sous réserve du consentement écrit préalable du laboratoire émetteur.

Certificat de Pesée Minimale

Incertitude de mesure élargie

U = Uo
Ur1 = 1 g

Exemple d'incertitudes élargies pour différentes valeurs de poids net :

Poids Net Affiché	*Incertitude de mesure élargie*	
15 g	1 g	4,00000 %
150 g	1 g	0,40000 %
1500 g	1 g	0,04000 %
7500 g	1 g	0,00800 %
15000 g	1 g	0,00400 %

Explication sur le tableau de pesée minimale

Les valeurs du poids net affiché indiquées dans le tableau suivant sont les valeurs des pesées minimales. Pour ces valeurs, l'incertitude élargie de mesure, multipliée par un Facteur de Sécurité (1, 2, 3 ou 5) est inférieure ou égale à l'Erreur Relative R

Tableau des Pesées Minimales pour différentes Erreurs Relatives et différents Facteurs de Sécurité

	Facteur de Sécurité FS			
Erreur Relative Requise	*1x FS = 1*	*2x FS = 2*	*3x FS = 3*	*5x FS = 5*
0.1 %	600 g	1200 g	1800 g	3000 g
0.2 %	300 g	600 g	900 g	1500 g
0.5 %	120 g	240 g	360 g	600 g
1 %	60 g	120 g	180 g	300 g
2 %	30 g	60 g	90 g	150 g
5 %	12 g	24 g	36 g	60 g

Remarques sur les valeurs de pesée minimale du tableau ci-dessus :

1. "N/A" est indiqué dans le tableau quand aucune valeur appropriée n'a pu être calculée.
2. Pour les instrument à étendues et échelons multiples, les valeurs indiquées dans le tableau ci-dessus s'appliquent à la plus petite étendue de mesure.
3. METTLER TOLEDO ne peut être tenu pour responsable du choix retenu concernant la sélection de l'Erreur Relative Requise ou du Facteur de Sécurité.
4. Le client veille à ce que les paramètres de réglage restent identiques à ceux utilisés pour l'établissement de ce Constat de Vérification Standard.
5. Le client veille à ce que l'environnement demeure identique aux conditions de travail retenues pour l'établissement de ce Constat de Vérification Standard.

Remarques

Aucune.

© METTLER TOLEDO

Toute reproduction partielle du certificat est interdite, sous réserve du consentement écrit préalable du laboratoire émetteur.

MICRO PRECISION CALIBRATION INC.

MICRO PRECISION CALIBRATION
22835 INDUSTRIAL PLACE
GRASS VALLEY CA 95949
530-268-1860

ACCREDITED
Calibration Laboratory
CERT # 935.01

Certificate of Calibration

Date: Jun 10, 2015

Cert No. 222008122545130

Customer:

STOVE BUILDERS INTERNATIONAL INC.

PORTES 11-12
250 DE COPENHAGUE
SAINT-AUGUSTIN-DE-DESMAURES QC G3A 2H3

MPC Control #:	DA0649
Asset ID:	SBI-239
Gage Type:	PITOT STATIC TUBE
Manufacturer:	DWYER INSTRUMENTS, INC.
Model Number:	160S-24
Size:	N/A
Temp/RH:	69°F / 41 %

Work Order #:	SAC-70072244
Purchase Order #:	44831
Serial Number:	160S-24A20W
Department:	N/A
Performed By:	BARRY MORRIS
Received Condition:	IN TOLERANCE
Returned Condition:	IN TOLERANCE
Cal. Date:	June 09, 2015
Cal. Interval:	12 MONTHS
Cal. Due Date:	June 09, 2016

Calibration Notes:

Test Points

Seq.	Description	Standard	Tolerance -	Tolerance +	As Found	As Left	UOM	Result	Uncertainty
1	Tested At:	0.100	0.090	0.110	0.100	0.100	in/H20	Passed	0.003
2	Tested At:	0.200	0.190	0.210	0.200	0.200	in/H20	Passed	0.003
3	Tested At:	0.300	0.290	0.310	0.300	0.300	in/H20	Passed	0.003
4	Tested At:	0.400	0.390	0.410	0.400	0.400	in/H20	Passed	0.003

Standards Used to Calibrate Equipment

I.D.	Description.	Model	Serial	Manufacturer	Cal. Due Date	Traceability #
AW3587	TIMER	N/A	N/A	SPORTLINE	Jun 4, 2016	222008122539739
AW4419	MULTI-FUNCTION PRESSURE INDICATOR	DPI 145	14501283	DRUCK	Nov 19, 2015	2008120226860

Procedures Used in this Event

Procedure Name	Description
MPC-00062	Pressure and Vacuum

Calibrating Technician: Barry Morris

BARRY MORRIS

QC Approval: Brian Gold

Brian Gold

The reported expanded uncertainty of measurement is stated as the standard uncertainty of measurement multiplied by the coverage factor k=2, which for normal distribution corresponds to a coverage probability of approximately 95%. The standard uncertainty of measurement has been determined in accordance with EA's Publication and NIST Technical Note 1297, 1994 Edition. Services rendered comply with ISO 17025:2005, ANSI/NCSL Z540-1, MPC Quality Manual, MPC CSD and with customer purchase order instructions.

Calibration cycles and resulting due dates were submitted/approved by the customer. Any number of factors may cause an instrument to drift out of tolerance before the next scheduled calibration. Recalibration cycles should be based on frequency of use, environmental conditions and customer's established systematic accuracy. The information on this report, pertains only to the instrument identified.

All standards are traceable to SI through the National Institute of Standards and Technology (NIST) and/or recognized national or international standards laboratories. Services rendered include proper manufacturer's service instruction and are warranted for no less than thirty (30) days. This report may not be reproduced in part or in a whole without the prior written approval of the issuing MPC lab.

MICRO PRECISION CALIBRATION INC.

MICRO PRECISION CALIBRATION
22835 INDUSTRIAL PLACE
GRASS VALLEY CA 95949
530-268-1860

Calibration Laboratory
CERT # 935.01

Certificate of Calibration

Date: Jul 19, 2016 **Cert No. 222200812427060**

Customer:
STOVE BUILDERS INTERNATIONAL INC.

PORTES 11-12
250 DE COPENHAGUE
SAINT-AUGUSTIN-DE-DESMAURES QC G3A 2H3

MPC Control #:	DA0649	Work Order #:	SAC-70080129
Asset ID:	SBI-239	Purchase Order #:	49495
Gage Type:	PITOT STATIC TUBE	Serial Number:	160S-24A20W
Manufacturer:	DWYER INSTRUMENTS, INC.	Department:	N/A
Model Number:	160S-24	Performed By:	BARRY MORRIS
Size:	N/A	Received Condition:	IN TOLERANCE
Temp/RH:	68.0°F / 45.0%	Returned Condition:	IN TOLERANCE
		Cal. Date:	July 14, 2016
		Cal. Interval:	12 MONTHS
		Cal. Due Date:	July 14, 2017

Calibration Notes:

Test Points

Seq.	Description	Standard	Tolerance -	Tolerance +	As Found	As Left	UOM	Result	Uncertainty
1	Tested At:	0.100	0.090	0.110	0.100	0.100	in/H20	Passed	0.003
2	Tested At:	0.200	0.190	0.210	0.200	0.200	In/H20	Passed	0.003
3	Tested At:	0.300	0.290	0.310	0.300	0.300	in/H20	Passed	0.003
4	Tested At:	0.400	0.390	0.410	0.400	0.400	in/H20	Passed	0.003

Standards Used to Calibrate Equipment

I.D.	Description.	Model	Serial	Manufacturer	Cal. Due Date	Traceability #
AW3587	TIMER	N/A	N/A	SPORTLINE	Jun 2, 2017	222200812372718
AW4419	MULTI-FUNCTION PRESSURE INDICATOR	DPI 145	14501283	DRUCK	Mar 18, 2018	222008122754295

Procedures Used in this Event

Procedure Name	Description
MPC-00062	Pressure and Vacuum, General, June-23-2016 rev04

Calibrating Technician: Barry Morris
BARRY MORRIS

QC Approval:
Brian Gold

The reported expanded uncertainty of measurement is stated as the standard uncertainty of measurement multiplied by the coverage factor k=2, which for normal distribution corresponds to a coverage probability of approximately 95%. The standard uncertainty of measurement has been determined in accordance with EA's Publication and NIST Technical Note 1297, 1994 Edition. Services rendered comply with ISO 17025:2005, ANSI/NCSL Z540-1, MPC Quality Manual, MPC CSD and with customer purchase order instructions.

Calibration cycles and resulting due dates were submitted/approved by the customer. Any number of factors may cause an instrument to drift out of tolerance before the next scheduled calibration. Recalibration cycles should be based on frequency of use, environmental conditions and customer's established systematic accuracy. The information on this report, pertains only to the instrument identified.

All standards are traceable to SI through the National Institute of Standards and Technology (NIST) and/or recognized national or international standards laboratories. Services rendered include proper manufacturer's service instruction and are warranted for no less than thirty (30) days. This report may not be reproduced in part or in a whole without the prior written approval of the issuing MPC lab.

(CERT, Rev 3)

MICRO PRECISION CALIBRATION
22835 INDUSTRIAL PLACE
GRASS VALLEY CA 95949
530-268-1860

Calibration Laboratory
CERT # 935.01

Certificate of Calibration

Date: Jun 11, 2015 **Cert No. 222008122546708**

Customer:
STOVE BUILDERS INTERNATIONAL INC.
PORTES 11-12
250 DE COPENHAGUE
SAINT-AUGUSTIN-DE-DESMAURES QC G3A 2H3

		Work Order #:	SAC-70072244
		Purchase Order #:	44831
MPC Control #:	DA0650	Serial Number:	16425450039
Asset ID:	SBI-241	Department:	N/A
Gage Type:	DIGITAL VANE/HOT-WIRE ANEMOMETER	Performed By:	BARRY MORRIS
Manufacturer:	TPI, INC.	Received Condition:	IN TOLERANCE
Model Number:	575	Returned Condition:	IN TOLERANCE
Size:	N/A	Cal. Date:	June 09, 2015
Temp/RH:	69°F / 41 %	Cal. Interval:	12 MONTHS
		Cal. Due Date:	June 09, 2016

Calibration Notes:

Test Points

Seq.	Description	Standard	Tolerance -	Tolerance +	As Found	As Left	UOM	Result	Uncertainty
1	Velocity (Vane)	200	193	207	199	199	ft/min	Passed	0.07
2	Vane:	400	389	411	402	402	ft/min	Passed	0.13
3	Vane:	600	585	615	604	604	ft/min	Passed	0.2
4	Vane	800	781	819	804	804	ft/min	Passed	0.26
5	Velocity (Hot Wire)	200	187	213	203	203	ft/min	Passed	0.07
6	Hot Wire:	400	377	423	405	405	ft/min	Passed	0.13
7	Hot Wire:	600	567	633	608	608	ft/min	Passed	0.2
8	Hot Wire:	800	757	843	807	807	ft/min	Passed	0.26
9	Temperature:	68.00	66.30	69.70	68.00	68.00	Deg F	Passed	0.01
10	Temperature:	100.00	98.00	102.00	100.20	100.20	Deg F	Passed	0.01

Standards Used to Calibrate Equipment

I.D.	Description.	Model	Serial	Manufacturer	Cal. Due Date	Traceability #
CJ5100	WIND TUNNEL WITH CONTROLLER	JS-500	375/305	INTERACTIVE	Nov 21, 2015	222008122317577

Calibrating Technician: Barry Morris
BARRY MORRIS

QC Approval: B. Gold
Brian Gold

The reported expanded uncertainty of measurement is stated as the standard uncertainty of measurement multiplied by the coverage factor k=2, which for normal distribution corresponds to a coverage probability of approximately 95%. The standard uncertainty of measurement has been determined in accordance with EA's Publication and NIST Technical Note 1297, 1994 Edition. Services rendered comply with ISO 17025:2005, ANSI/NCSL Z540-1, MPC Quality Manual, MPC CSD and with customer purchase order instructions.

Calibration cycles and resulting due dates were submitted/approved by the customer. Any number of factors may cause an instrument to drift out of tolerance before the next scheduled calibration. Recalibration cycles should be based on frequency of use, environmental conditions and customer's established systematic accuracy. The information on this report, pertains only to the instrument identified.

All standards are traceable to SI through the National Institute of Standards and Technology (NIST) and/or recognized national or international standards laboratories. Services rendered include proper manufacturer's service instruction and are warranted for no less than thirty (30) days. This report may not be reproduced in part or in a whole without the prior written approval of the issuing MPC lab.

MICRO PRECISION CALIBRATION
22835 INDUSTRIAL PLACE
GRASS VALLEY CA 95949
530-268-1860

Calibration Laboratory
CERT # 935.01

Certificate of Calibration

Date: Jun 11, 2015 **Cert No. 222008122546708**

				INSTRUMENTS		
AE2821	ANEMOMETER	AM-4822	N272316	LANDTEK	Nov 12, 2015	220081202197887
AV5000	ENVIRONMENTAL CHAMBER	BTX-475	0612421	ESPEC	Dec 15, 2015	222008122342880
CL7456	STANDARD PLATINUM RESISTANCE THERMOMETER PROBE	5681	1595	FLUKE	Dec 4, 2015	A7B16006

Procedures Used in this Event

Procedure Name	Description
MPC-00132	Anemometers Calibration Procedure

Calibrating Technician: Barry Morris

BARRY MORRIS

QC Approval: B. Gold

Brian Gold

The reported expanded uncertainty of measurement is stated as the standard uncertainty of measurement multiplied by the coverage factor k=2, which for normal distribution corresponds to a coverage probability of approximately 95%. The standard uncertainty of measurement has been determined in accordance with EA's Publication and NIST Technical Note 1297, 1994 Edition. Services rendered comply with ISO 17025:2005, ANSI/NCSL Z540-1, MPC Quality Manual, MPC CSD and with customer purchase order instructions.

Calibration cycles and resulting due dates were submitted/approved by the customer. Any number of factors may cause an instrument to drift out of tolerance before the next scheduled calibration. Recalibration cycles should be based on frequency of use, environmental conditions and customer's established systematic accuracy. The information on this report, pertains only to the instrument identified.

All standards are traceable to SI through the National Institute of Standards and Technology (NIST) and/or recognized national or international standards laboratories. Services rendered include proper manufacturer's service instruction and are warranted for no less than thirty (30) days. This report may not be reproduced in part or in a whole without the prior written approval of the issuing MPC lab.

MICRO PRECISION CALIBRATION INC.

MICRO PRECISION CALIBRATION
22835 INDUSTRIAL PLACE
GRASS VALLEY CA 95949
530-268-1860

ACCREDITED
Calibration Laboratory
CERT # 935.01

Certificate of Calibration

Date: Jul 19, 2016

Cert No. 222200812427069

Customer:

STOVE BUILDERS INTERNATIONAL INC.

PORTES 11-12
250 DE COPENHAGUE
SAINT-AUGUSTIN-DE-DESMAURES QC G3A 2H3

MPC Control #:	DA0650	Work Order #:	SAC-70080129
Asset ID:	SBI-241	Purchase Order #:	49495
Gage Type:	DIGITAL VANE/HOT-WIRE ANEMOMETER	Serial Number:	16425450039
Manufacturer:	TPI, INC.	Department:	N/A
Model Number:	575	Performed By:	TODD MORRIS
Size:	N/A	Received Condition:	IN TOLERANCE
Temp/RH:	68.0°F / 35.0%	Returned Condition:	IN TOLERANCE
		Cal. Date:	July 18, 2016
		Cal. Interval:	12 MONTHS
		Cal. Due Date:	July 18, 2017

Calibration Notes:

Test Points

Seq.	Description	Standard	Tolerance -	Tolerance +	As Found	As Left	UOM	Result	Uncertainty
1	Air Velocity (Vane)	200	193	207	198	198	ft/min	Passed	5.8
2		400	389	411	395	395	ft/min	Passed	12
3		600	585	615	597	597	ft/min	Passed	18
4		800	781	819	809	809	ft/min	Passed	24
5	Air Velocity (Hot Wire)	200	196	204	200	200	ft/min	Passed	5.8
6		400	395	405	398	398	ft/min	Passed	12
7		600	594	606	603	603	ft/min	Passed	18
8		800	793	807	799	799	ft/min	Passed	24
9	Temperature:	68.0	66.3	69.7	68.3	68.3	F	Passed	0.1
10		100.0	98.0	102.0	100.5	100.5	F	Passed	0.1

Standards Used to Calibrate Equipment

I.D.	Description.	Model	Serial	Manufacturer	Cal. Due Date	Traceability #
CJ5100	WIND TUNNEL WITH CONTROLLER	JS-500	375/305	INTERACTIVE INSTRUMENTS	Oct 29, 2016	222008122715516

Calibrating Technician: Todd Morris

TODD MORRIS

QC Approval:

Brian Gold

The reported expanded uncertainty of measurement is stated as the standard uncertainty of measurement multiplied by the coverage factor k=2, which for normal distribution corresponds to a coverage probability of approximately 95%. The standard uncertainty of measurement has been determined in accordance with EA's Publication and NIST Technical Note 1297, 1994 Edition. Services rendered comply with ISO 17025:2005, ANSI/NCSL Z540-1, MPC Quality Manual, MPC CSD and with customer purchase order instructions.

Calibration cycles and resulting due dates were submitted/approved by the customer. Any number of factors may cause an instrument to drift out of tolerance before the next scheduled calibration. Recalibration cycles should be based on frequency of use, environmental conditions and customer's established systematic accuracy. The information on this report, pertains only to the instrument identified.

All standards are traceable to SI through the National Institute of Standards and Technology (NIST) and/or recognized national or international standards laboratories. Services rendered include proper manufacturer's service instruction and are warranted for no less than thirty (30) days. This report may not be reproduced in part or in a whole without the prior written approval of the issuing MPC lab.

MICRO PRECISION CALIBRATION INC.

MICRO PRECISION CALIBRATION
22835 INDUSTRIAL PLACE
GRASS VALLEY CA 95949
530-268-1860

ACCREDITED
Calibration Laboratory
CERT # 935.01

Certificate of Calibration

Date: Jul 19, 2016

Cert No. 222200812427069

AE2821	ANEMOMETER	AM-4822	N272316	LANDTEK	Oct 29, 2016	222008122715506
AV5000	ENVIRONMENTAL CHAMBER	BTX-475	0612421	ESPEC	May 4, 2017	222200812334220
CL7456	STANDARD PLATINUM RESISTANCE THERMOMETER PROBE	5681	1595	FLUKE	Dec 4, 2016	A7B16006

Procedures Used in this Event

Procedure Name	Description
MPC-00132	Anemometers, General, May-10-2016 rev02

Calibrating Technician: Todd Morris

TODD MORRIS

QC Approval:

Brian Gold

The reported expanded uncertainty of measurement is stated as the standard uncertainty of measurement multiplied by the coverage factor k=2, which for normal distribution corresponds to a coverage probability of approximately 95%. The standard uncertainty of measurement has been determined in accordance with EA's Publication and NIST Technical Note 1297, 1994 Edition. Services rendered comply with ISO 17025:2005, ANSI/NCSL Z540-1, MPC Quality Manual, MPC CSD and with customer purchase order instructions.

Calibration cycles and resulting due dates were submitted/approved by the customer. Any number of factors may cause an instrument to drift out of tolerance before the next scheduled calibration. Recalibration cycles should be based on frequency of use, environmental conditions and customer's established systematic accuracy. The information on this report, pertains only to the instrument identified.

All standards are traceable to SI through the National Institute of Standards and Technology (NIST) and/or recognized national or international standards laboratories. Services rendered include proper manufacturer's service instruction and are warranted for no less than thirty (30) days. This report may not be reproduced in part or in a whole without the prior written approval of the issuing MPC lab.

Report of Calibration

As Found

ACCREDITED
CALIBRATION
CERT #2260.01

Procedure: Dwyer MS-121-LCD 0 to 0.1;0.25;0.5 inH2O/7520Ip 8845A: Rev.1.0.A

UUT

Made by:	Dwyer
Model:	MS-121-LCD
Serial No.:	E52U0100523
ID No.:	SBI-250
Description:	Digital Pressure Gauge

Calibration

Report No.:	AC15081457-E52U0100523
Adjusted:	No
Condition:	Out of Tolerance
Calibration Date:	3-Sep-2015

Customer

STOVE BUILDER INTERNATIONAL INC.
250 RUE DE COPENHAGUE
ST-AUSTIN-DE-DESMAURES, QC
G3A 2H3

Environment

Temperature:	25.3°C
Humidity:	58%RH

STATEMENT OF UNCERTAINTY: The reported expanded uncertainty of measurement is stated as the standard measurement uncertainty multiplied by the coverage factor K = 2, which for a normal distribution corresponds to a coverage probability of approximately 95 percent. Alpha Controls & Instrumentation Inc. certifies this instrument was calibrated on the date shown using standards traceable to NIST/NRC or accepted intrinsic standards and in compliance with ISO/IEC-17025:2005 and ANSI/NCSL Z540-1.

Any statement of compliance is made without taking measurement uncertainty into account and is based on UUT performance against required tolerance only. The customer must ensure equipment calibrated meets the intended use.

Tolerance is based on manufacturer specification if not stated otherwise. Calibration results relate to items calibrated only.

This report shall not be reproduced except in full without written approval of Alpha Controls and Instrumentation Inc.

STANDARDS

Instrument	Model	ID No./Serial No.	Traceability No.	Recall Date
Low Pressure Calibrator	Ruska 7250LP	PRE-CAL-06	1500171325/15000171326	1-Oct-2015
Multimeter	Fluke 8845A	ELC-MTR-04	AC14121527-9366020	16-Jan-2016

REMARKS:

Calibrated in vertical position.

Performed by: Ben Lemelin

Reviewed by: Anthony Morra

Report of Calibration
As Found

ACCREDITED
CALIBRATION
CERT #2260.01

UUT

Made by: Dwyer
Model: MS-121-LCD
Serial No.: E52U0100523
ID No.: SBI-250
Description: Digital Pressure Gauge

Calibration

Report No.: AC15081457-E52U0100523
Adjusted: No
Condition: Out of Tolerance
Calibration Date: 3-Sep-2015

Test Description	STD	UUT	Error	Tolerance	Units	P/F	Uncertainty
Range: 0 to 0.1 inH2O							
Output signal: 4 to 20 mA							
PRESSURE TEST							
Display Reading		-0.0076					
Output @ 0.0000 inH2O, mA		3.497					
0.000 inH2O	0.0000	-0.0031	-0.0031	±0.0020	inH2O	Fail	1.5e-04
Display Reading		0.0176					
Output @ 0.025 inH2O, mA		6.831					
0.025 inH2O	0.0250	0.0183	-0.0067	±0.0020	inH2O	Fail	1.5e-04
Display Reading		0.0430					
Output @ 0.050 inH2O, mA		10.934					
0.050 inH2O	0.0500	0.0433	-0.0067	±0.0020	inH2O	Fail	1.5e-04
Display Reading		0.0684					
Output @ 0.075 inH2O, mA		14.954					
0.075 inH2O	0.0750	0.0685	-0.0065	±0.0020	inH2O	Fail	1.5e-04
Display Reading		0.0938					
Output @ 0.100 inH2O, mA		19.018					
0.100 inH2O	0.1000	0.0939	-0.0061	±0.0020	inH2O	Fail	1.5e-04
Display Reading		0.0688					
Output @ 0.075 inH2O, mA		15.027					
0.075 inH2O	0.0750	0.0689	-0.0061	±0.0020	inH2O	Fail	1.5e-04
Display Reading		0.0439					
Output @ 0.050 inH2O, mA		11.003					
0.050 inH2O	0.0500	0.0438	-0.0062	±0.0020	inH2O	Fail	1.5e-04
Display Reading		0.0186					
Output @ 0.025 inH2O, mA		6.986					
0.025 inH2O	0.0250	0.0187	-0.0063	±0.0020	inH2O	Fail	1.5e-04
Display Reading		0.0063					
Output @ 0.0000 inH2O, mA		3.497					
0.000 inH2O	0.0000	-0.0031	-0.0031	±0.0020	inH2O	Fail	1.5e-04
Range: 0 to 0.25 inH2O							
Output signal: 4 to 20 mA							
PRESSURE TEST							
Display Reading		-0.0063					
Output @ 0.0000 inH2O, mA		3.582					
0.0000 inH2O	0.0000	-0.0000	0.0000	±0.0025	inH2O	Pass	1.5e-04
Display Reading		0.0562					
Output @ 0.0625 inH2O, mA		7.613					
0.0625 inH2O	0.0625	0.0565	-0.0060	±0.0025	inH2O	Fail	1.5e-04
Display Reading		0.1182					
Output @ 0.1250 inH2O, mA		11.595					
0.1250 inH2O	0.1250	0.1187	-0.0063	±0.0025	inH2O	Fail	1.5e-04

Report of Calibration
As Found

ACCREDITED CALIBRATION CERT #2260.01

Procedure: Dwyer MS-121-LCD 0 to 0.1;0.25;0.5 inH2O/7520Ip 8845A: Rev.1.0.A

UUT

Made by: Dwyer
Model: MS-121-LCD
Serial No.: E52U0100523
ID No.: SBI-250
Description: Digital Pressure Gauge

Calibration

Report No.: AC15081457-E52U0100523
Adjusted: No
Condition: Out of Tolerance
Calibration Date: 3-Sep-2015

Test Description	STD	UUT	Error	Tolerance	Units	P/F	Uncertainty
Display Reading		0.1824					
Output @ 0.1875 inH2O, mA		15.648					
0.1875 inH2O	0.1875	0.1820	-0.0055	±0.0025	inH2O	Fail	1.5e-04
Display Reading		0.2456					
Output @ 0.2500 inH2O, mA		19.714					
0.2500 inH2O	0.2500	0.2455	-0.0045	±0.0025	inH2O	Fail	1.5e-04
Display Reading		0.1829					
Output @ 0.1875 inH2O, mA		15.699					
0.1875 inH2O	0.1875	0.1828	-0.0047	±0.0025	inH2O	Fail	1.5e-04
Display Reading		0.1196					
Output @ 0.1250 inH2O, mA		11.681					
0.1250 inH2O	0.1250	0.1200	-0.0050	±0.0025	inH2O	Fail	1.5e-04
Display Reading		0.0566					
Output @ 0.0625 inH2O, mA		7.665					
0.0625 inH2O	0.0625	0.0573	-0.0052	±0.0025	inH2O	Fail	1.5e-04
Display Reading		-0.0056					
Output @ 0.0000 inH2O, mA		3.651					
0.0000 inH2O	0.0000	-0.0055	-0.0055	±0.0025	inH2O	Fail	1.5e-04
Range: 0 to 0.5 inH2O							
Output signal: 4 to 20 mA							
PRESSURE TEST							
Display Reading		-0.0056					
Output @ 0.0000 inH2O, mA		3.822					
0.0000 inH2O	0.0000	-0.0056	-0.0056	±0.0050	inH2O	Fail	1.5e-04
Display Reading		0.1184					
Output @ 0.1250 inH2O, mA		7.822					
0.1250 inH2O	0.1250	0.1194	-0.0056	±0.0050	inH2O	Fail	1.5e-04
Display Reading		0.2446					
Output @ 0.2500 inH2O, mA		11.855					
0.2500 inH2O	0.2500	0.2455	-0.0045	±0.0050	inH2O	Pass	1.5e-04
Display Reading		0.3721					
Output @ 0.3750 inH2O, mA		15.942					
0.3750 inH2O	0.3750	0.3732	-0.0018	±0.0050	inH2O	Pass	1.5e-04
Display Reading		0.4995					
Output @ 0.5000 inH2O, mA		20.028					
0.5000 inH2O	0.5000	0.5009	0.0009	±0.0050	inH2O	Pass	1.5e-04
Display Reading		0.3752					
Output @ 0.3750 inH2O, mA		16.028					
0.3750 inH2O	0.3750	0.3759	0.0009	±0.0050	inH2O	Pass	1.5e-04
Display Reading		0.2485					
Output @ 0.2500 inH2O, mA		11.975					
0.2500 inH2O	0.2500	0.2492	-0.0008	±0.0050	inH2O	Pass	1.5e-04

Report of Calibration
As Found

ACCREDITED
CALIBRATION
CERT #2260.01

Procedure: Dwyer MS-121-LCD 0 to 0.1;0.25;0.5 inH2O/7520lp 8845A: Rev.1.0.A

UUT

Made by: Dwyer
Model: MS-121-LCD
Serial No.: E52U0100523
ID No.: SBI-250
Description: Digital Pressure Gauge

Calibration

Report No.: AC15081457-E52U0100523
Adjusted: No
Condition: Out of Tolerance
Calibration Date: 3-Sep-2015

Test Description	STD	UUT	Error	Tolerance	Units	P/F	Uncertainty
Display Reading		0.1213					
Output @ 0.1250 inH2O, mA		7.908					
0.1250 inH2O	0.1250	0.1221	-0.0029	±0.0050	inH2O	Pass	1.5e-04
Display Reading		-0.0034					
Output @ 0.0000 inH2O, mA		3.891					
0.000 inH2O	0.0000	-0.0034	-0.0034	±0.0050	inH2O	Pass	1.5e-04

END OF REPORT

Report of Calibration

As Left

ACCREDITED
CALIBRATION
CERT #2260.01

Procedure: Dwyer MS-121-LCD 0 to 0.1;0.25;0.5 inH2O/7520lp 8845A: Rev.1.0.A

UUT

Made by:	Dwyer
Model:	MS-121-LCD
Serial No.:	E52U0100523
ID No.:	SBI-250
Description:	Digital Pressure Gauge

Customer

STOVE BUILDER INTERNATIONAL INC.
250 RUE DE COPENHAGUE
ST-AUSTIN-DE-DESMAURES, QC
G3A 2H3

Calibration

Report No.:	AC15081457-E52U0100523
Adjusted:	Yes
Condition:	In Tolerance
Calibration Date:	3-Sep-2015
Calibration Due:	3-Sep-2016

Environment

Temperature:	25.9°C
Humidity:	56%RH

STATEMENT OF UNCERTAINTY: The reported expanded uncertainty of measurement is stated as the standard measurement uncertainty multiplied by the coverage factor K = 2, which for a normal distribution corresponds to a coverage probability of approximately 95 percent. Alpha Controls & Instrumentation Inc. certifies this instrument was calibrated on the date shown using standards traceable to NIST/NRC or accepted intrinsic standards and in compliance with ISO/IEC-17025:2005 and ANSI/NCSL Z540-1.

Any statement of compliance is made without taking measurement uncertainty into account and is based on UUT performance against required tolerance only. The customer must ensure equipment calibrated meets the intended use.

Tolerance is based on manufacturer specification if not stated otherwise. Calibration results relate to items calibrated only.

This report shall not be reproduced except in full without written approval of Alpha Controls and Instrumentation Inc.

STANDARDS

Instrument	Model	ID No./Serial No.	Traceability No.	Recall Date
Low Pressure Calibrator	Ruska 7250LP	PRE-CAL-06	1500171325/15000171326	1-Oct-2015
Multimeter	Fluke 8845A	ELC-MTR-04	AC14121527-9366020	16-Jan-2016

REMARKS:

Adjusted trim pots.

Calibrated in vertical position.

Performed by: Ben Lemelin

Reviewed by: Anthony Morra

Report of Calibration
As Left

ACCREDITED
CALIBRATION
CERT #2260.01

UUT

Made by: Dwyer
Model: MS-121-LCD
Serial No.: E52U0100523
ID No.: SBI-250
Description: Digital Pressure Gauge

Calibration

Report No.: AC15081457-E52U0100523
Adjusted: Yes
Condition: In Tolerance
Calibration Date: 3-Sep-2015
Calibration Due: 3-Sep-2016

Test Description	STD	UUT	Error	Tolerance	Units	P/F	Uncertainty
Range: 0 to 0.1 inH2O							
Output signal: 4 to 20 mA							
PRESSURE TEST							
Display Reading		0.0005					
Output @ 0.0000 inH2O, mA		4.08					
0.000 inH2O	0.0000	0.0005	0.0005	±0.0020	inH2O	Pass	1.5e-04
Display Reading		0.0251					
Output @ 0.025 inH2O, mA		8.030					
0.025 inH2O	0.0250	0.0252	0.0002	±0.0020	inH2O	Pass	1.5e-04
Display Reading		0.0503					
Output @ 0.050 inH2O, mA		12.099					
0.050 inH2O	0.0500	0.0506	0.0006	±0.0020	inH2O	Pass	1.5e-04
Display Reading		0.0757					
Output @ 0.075 inH2O, mA		16.135					
0.075 inH2O	0.0750	0.0758	0.0008	±0.0020	inH2O	Pass	1.5e-04
Display Reading		0.0994					
Output @ 0.100 inH2O, mA		20.048					
0.100 inH2O	0.1000	0.1003	0.0003	±0.0020	inH2O	Pass	1.5e-04
Display Reading		0.0754					
Output @ 0.075 inH2O, mA		16.029					
0.075 inH2O	0.0750	0.0752	0.0002	±0.0020	inH2O	Pass	1.5e-04
Display Reading		0.0503					
Output @ 0.050 inH2O, mA		12.063					
0.050 inH2O	0.0500	0.0504	0.0004	±0.0020	inH2O	Pass	1.5e-04
Display Reading		0.0254					
Output @ 0.025 inH2O, mA		8.03					
0.025 inH2O	0.0250	0.0252	0.0002	±0.0020	inH2O	Pass	1.5e-04
Display Reading		0.0005					
Output @ 0.0000 inH2O, mA		4.08					
0.000 inH2O	0.0000	0.0005	0.0005	±0.0020	inH2O	Pass	1.5e-04
Range: 0 to 0.25 inH2O							
Output signal: 4 to 20 mA							
PRESSURE TEST							
Display Reading		0.0005					
Output @ 0.0000 inH2O, mA		4.028					
0.0000 inH2O	0.0000	0.0004	0.0004	±0.0025	inH2O	Pass	1.5e-04
Display Reading		0.0623					
Output @ 0.0625 inH2O, mA		7.996					
0.0625 inH2O	0.0625	0.0624	-0.0001	±0.0025	inH2O	Pass	1.5e-04
Display Reading		0.1233					
Output @ 0.1250 inH2O, mA		11.907					
0.1250 inH2O	0.1250	0.1235	-0.0015	±0.0025	inH2O	Pass	1.5e-04

Report of Calibration
As Left

ACCREDITED
CALIBRATION
CERT #2260.01

UUT

Made by: Dwyer
Model: MS-121-LCD
Serial No.: E52U0100523
ID No.: SBI-250
Description: Digital Pressure Gauge

Calibration

Report No.: AC15081457-E52U0100523
Adjusted: Yes
Condition: In Tolerance
Calibration Date: 3-Sep-2015
Calibration Due: 3-Sep-2016

Test Description	STD	UUT	Error	Tolerance	Units	P/F	Uncertainty
Display Reading		0.1853					
Output @ 0.1875 inH2O, mA		15.874					
0.1875 inH2O	0.1875	0.1855	-0.0020	±0.0025	inH2O	Pass	1.5e-04
Display Reading		0.2476					
Output @ 0.2500 inH2O, mA		19.873					
0.2500 inH2O	0.2500	0.2480	-0.0020	±0.0025	inH2O	Pass	1.5e-04
Display Reading		0.1853					
Output @ 0.1875 inH2O, mA		15.892					
0.1875 inH2O	0.1875	0.1858	-0.0017	±0.0025	inH2O	Pass	1.5e-04
Display Reading		0.1243					
Output @ 0.1250 inH2O, mA		11.958					
0.1250 inH2O	0.1250	0.1243	-0.0007	±0.0025	inH2O	Pass	1.5e-04
Display Reading		0.0627					
Output @ 0.0625 inH2O, mA		8.065					
0.0625 inH2O	0.0625	0.0635	0.0010	±0.0025	inH2O	Pass	1.5e-04
Display Reading		0.0007					
Output @ 0.0000 inH2O, mA		4.046					
0.0000 inH2O	0.0000	0.0007	0.0007	±0.0025	inH2O	Pass	1.5e-04
Range: 0 to 0.5 inH2O							
Output signal: 4 to 20 mA							
PRESSURE TEST							
Display Reading		0.0005					
Output @ 0.0000 inH2O, mA		4.011					
0.0000 inH2O	0.0000	0.0003	0.0003	±0.0050	inH2O	Pass	1.5e-04
Display Reading		0.1233					
Output @ 0.1250 inH2O, mA		7.960					
0.1250 inH2O	0.1250	0.1238	-0.0012	±0.0050	inH2O	Pass	1.5e-04
Display Reading		0.2468					
Output @ 0.2500 inH2O, mA		11.924					
0.2500 inH2O	0.2500	0.2476	-0.0024	±0.0050	inH2O	Pass	1.5e-04
Display Reading		0.3735					
Output @ 0.3750 inH2O, mA		15.978					
0.3750 inH2O	0.3750	0.3743	-0.0007	±0.0050	inH2O	Pass	1.5e-04
Display Reading		0.4995					
Output @ 0.5000 inH2O, mA		20.031					
0.5000 inH2O	0.5000	0.5010	0.0010	±0.0050	inH2O	Pass	1.5e-04
Display Reading		0.3752					
Output @ 0.3750 inH2O, mA		16.029					
0.3750 inH2O	0.3750	0.3759	0.0009	±0.0050	inH2O	Pass	1.5e-04
Display Reading		0.2488					
Output @ 0.2500 inH2O, mA		11.958					
0.2500 inH2O	0.2500	0.2487	-0.0013	±0.0050	inH2O	Pass	1.5e-04

Report of Calibration
As Left

ACCREDITED
CALIBRATION
CERT #2260.01

UUT

Made by: Dwyer
Model: MS-121-LCD
Serial No.: E52U0100523
ID No.: SBI-250
Description: Digital Pressure Gauge

Calibration

Report No.: AC15081457-E52U0100523
Adjusted: Yes
Condition: In Tolerance
Calibration Date: 3-Sep-2015
Calibration Due: 3-Sep-2016

Test Description	STD	UUT	Error	Tolerance	Units	P/F	Uncertainty
Display Reading		0.1252					
Output @ 0.1250 inH2O, mA		8.012					
0.1250 inH2O	0.1250	0.1254	0.0004	±0.0050	inH2O	Pass	1.5e-04
Display Reading		0.0010					
Output @ 0.0000 inH2O, mA		4.028					
0.000 inH2O	0.0000	0.0009	0.0009	±0.0050	inH2O	Pass	1.5e-04

END OF REPORT

Report of Calibration

As Found / As Left

ACCREDITED
CALIBRATION
CERT #2260.01

Procedure: Dwyer MS-121-LCD 0 to 0.1;0.25 inH2O/7520lp 8845A: Rev.1.0.A

UUT

Made by:	Dwyer
Model:	MS-121-LCD
Serial No.:	E51U01003612
ID No.:	SBI-253
Description:	Digital Pressure Gauge

Calibration

Report No.:	AC16031301-E51U01003612
Adjusted:	No
Condition:	In Tolerance
Calibration Date:	18-Mar-2016
Calibration Due:	18-Mar-2017

Customer

STOVE BUILDER INTERNATIONAL INC.
250 RUE DE COPENHAGUE
ST-AUSTIN-DE-DESMAURES, QC
G3A 2H3

Environment

Temperature:	20.9°C
Humidity:	29%RH

STATEMENT OF UNCERTAINTY: The reported expanded uncertainty of measurement is stated as the standard measurement uncertainty multiplied by the coverage factor K = 2, which for a normal distribution corresponds to a coverage probability of approximately 95 percent. Alpha Controls & Instrumentation Inc. certifies this instrument was calibrated on the date shown using standards traceable to NIST/NRC or accepted intrinsic standards and in compliance with ISO/IEC-17025:2005 and ANSI/NCSL Z540-1.

Any statement of compliance is made without taking measurement uncertainty into account and is based on UUT performance against required tolerance only. The customer must ensure equipment calibrated meets the intended use.

Tolerance is based on manufacturer specification if not stated otherwise. Calibration results relate to items calibrated only.

This report shall not be reproduced except in full without written approval of Alpha Controls and Instrumentation Inc.

STANDARDS

Instrument	Model	ID No./Serial No.	Traceability No.	Recall Date
Low Pressure Calibrator	Ruska 7250LP	PRE-CAL-06	1500188474/1500188475	29-Sep-2016
Multimeter	Fluke 8845A	ELC-MTR-04	AC15121397-9366020	13-Jan-2017

REMARKS:

Calibrated in vertical position.

Performed by: Tony Wheaton
Tony Wheaton

Reviewed by:
Slava Peciurov

Report of Calibration
As Found / As Left

ACCREDITED
CALIBRATION
CERT #2260.01

UUT

Made by: Dwyer
Model: MS-121-LCD
Serial No.: E51U01003612
ID No.: SBI-253
Description: Digital Pressure Gauge

Calibration

Report No.: AC16031301-E51U01003612
Adjusted: No
Condition: In Tolerance
Calibration Date: 18-Mar-2016
Calibration Due: 18-Mar-2017

Test Description	STD	UUT	Error	Tolerance	Units	P/F	Uncertainty
Range: 0 to 0.1 inH2O							
Output signal: 4 to 20 mA							
PRESSURE TEST							
Display Reading		0.0000					
Output @ 0.0000 inH2O, mA		3.998					
0.000 inH2O	0.0000	0.0000	0.0000	±0.0020	inH2O	Pass	1.5e-04
Display Reading		0.0244					
Output @ 0.025 inH2O, mA		7.894					
0.025 inH2O	0.0250	0.0243	-0.0007	±0.0020	inH2O	Pass	1.5e-04
Display Reading		0.0488					
Output @ 0.050 inH2O, mA		11.803					
0.050 inH2O	0.0500	0.0488	-0.0012	±0.0020	inH2O	Pass	1.5e-04
Display Reading		0.0737					
Output @ 0.075 inH2O, mA		15.802					
0.075 inH2O	0.0750	0.0738	-0.0012	±0.0020	inH2O	Pass	1.5e-04
Display Reading		0.0991					
Output @ 0.100 inH2O, mA		19.905					
0.100 inH2O	0.1000	0.0994	-0.0006	±0.0020	inH2O	Pass	1.5e-04
Display Reading		0.0735					
Output @ 0.075 inH2O, mA		15.755					
0.075 inH2O	0.0750	0.0735	-0.0015	±0.0020	inH2O	Pass	1.5e-04
Display Reading		0.0491					
Output @ 0.050 inH2O, mA		11.891					
0.050 inH2O	0.0500	0.0493	-0.0007	±0.0020	inH2O	Pass	1.5e-04
Display Reading		0.0247					
Output @ 0.025 inH2O, mA		7.947					
0.025 inH2O	0.0250	0.0247	-0.0003	±0.0020	inH2O	Pass	1.5e-04
Display Reading		0.0000					
Output @ 0.0000 inH2O, mA		3.999					
0.000 inH2O	0.0000	0.0000	0.0000	±0.0020	inH2O	Pass	1.5e-04
Range: 0 to 0.25 inH2O							
Output signal: 4 to 20 mA							
PRESSURE TEST							
Display Reading		0.0002					
Output @ 0.0000 inH2O, mA		3.999					
0.0000 inH2O	0.0000	0.0000	0.0000	±0.0025	inH2O	Pass	1.5e-04
Display Reading		0.0620					
Output @ 0.0625 inH2O, mA		7.964					
0.0625 inH2O	0.0625	0.0619	-0.0006	±0.0025	inH2O	Pass	1.5e-04
Display Reading		0.1243					
Output @ 0.1250 inH2O, mA		11.942					
0.1250 inH2O	0.1250	0.1241	-0.0009	±0.0025	inH2O	Pass	1.5e-04

Report of Calibration
As Found / As Left

ACCREDITED
CALIBRATION
CERT #2260.01

UUT

Made by: Dwyer
Model: MS-121-LCD
Serial No.: E51U01003612
ID No.: SBI-253
Description: Digital Pressure Gauge

Calibration

Report No.: AC16031301-E51U01003612
Adjusted: No
Condition: In Tolerance
Calibration Date: 18-Mar-2016
Calibration Due: 18-Mar-2017

Test Description	STD	UUT	Error	Tolerance	Units	P/F	Uncertainty
Display Reading		0.1860					
Output @ 0.1875 inH2O, mA		15.906					
0.1875 inH2O	0.1875	0.1860	-0.0015	±0.0025	inH2O	Pass	1.5e-04
Display Reading		0.2490					
Output @ 0.2500 inH2O, mA		19.940					
0.2500 inH2O	0.2500	0.2491	-0.0009	±0.0025	inH2O	Pass	1.5e-04
Display Reading		0.1868					
Output @ 0.1875 inH2O, mA		15.959					
0.1875 inH2O	0.1875	0.1869	-0.0006	±0.0025	inH2O	Pass	1.5e-04
Display Reading		0.1245					
Output @ 0.1250 inH2O, mA		11.960					
0.1250 inH2O	0.1250	0.1244	-0.0006	±0.0025	inH2O	Pass	1.5e-04
Display Reading		0.0618					
Output @ 0.0625 inH2O, mA		7.943					
0.0625 inH2O	0.0625	0.0616	-0.0009	±0.0025	inH2O	Pass	1.5e-04
Display Reading		0.0000					
Output @ 0.0000 inH2O, mA		3.998					
0.0000 inH2O	0.0000	0.0000	0.0000	±0.0025	inH2O	Pass	1.5e-04

END OF REPORT

Report of Calibration

As Found

ACCREDITED
CALIBRATION
CERT #2260.01

Procedure: Mass Flow Meter/Controller: 5pts: Rev. 1.0.A

UUT

Made by:	Aalborg
Model:	GFC37
Serial No.:	251111-5
ID No.:	SBI-259
Description:	Mass Flow Controller

Customer

STOVE BUILDER INTERNATIONAL INC.
250 RUE DE COPENHAGUE
ST-AUSTIN-DE-DESMAURES, QC
G3A 2H3

Calibration

Report No.:	AC15081457-251111-5
Adjusted:	No
Condition:	Out of Tolerance
Calibration Date:	3-Sep-2015

Environment

Temperature:	25.7°C
Humidity:	58%RH

STATEMENT OF UNCERTAINTY: The reported expanded uncertainty of measurement is stated as the standard measurement uncertainty multiplied by the coverage factor K = 2, which for a normal distribution corresponds to a coverage probability of approximately 95 percent. Alpha Controls & Instrumentation Inc. certifies this instrument was calibrated on the date shown using standards traceable to NIST/NRC or accepted intrinsic standards and in compliance with ISO/IEC-17025:2005 and ANSI/NCSL Z540-1.

Any statement of compliance is made without taking measurement uncertainty into account and is based on UUT performance against required tolerance only. The customer must ensure equipment calibrated meets the intended use.

Tolerance is based on manufacturer specification if not stated otherwise. Calibration results relate to items calibrated only.

This report shall not be reproduced except in full without written approval of Alpha Controls and Instrumentation Inc.

STANDARDS

Instrument	Model	ID No./Serial No.	Traceability No.	Recall Date
Molbloc-L Laminar Element	Fluke 3E4	FLOW-3E4-01	1500183748	26-Jun-2016
Molbloc-L Laminar Element	Fluke 3E4	FLOW-3E4-02	1500183749	27-Jun-2016
Process Calibrator	Fluke 744	ELC-CAL-02	AC14101571-8223003	10-Nov-2015
Multimeter	Fluke 87 V	ELC-MTR-05	AC15031661-96010221	25-Mar-2016
Mass Flow Terminal	Fluke Molbox1+	FLOW-CAL-01	1500183843	30-Jun-2016

REMARKS:

LCD readings: 0.0, 5.1, 10.0, 15.1, 20.0

Cleaned filter.

Performed by: Slava Peciurov

Reviewed by: Anthony Morra

Report of Calibration
As Found

ACCREDITED
CALIBRATION
CERT #2260.01

UUT

Made by: Aalborg
Model: GFC37
Serial No.: 251111-5
ID No.: SBI-259
Description: Mass Flow Controller

Calibration

Report No.: AC15081457-251111-5
Adjusted: No
Condition: Out of Tolerance
Calibration Date: 3-Sep-2015

Test Description	Output	STD	UUT	Error (%FS)	Tolerance (%FS)	Units	P/F
0.0000	0.024V	0.0023	0.10	0.47	±1.00	slm@70.0F	Pass
5.0000	1.269V	5.2406	5.08	-0.82	±1.00	slm@70.0F	Pass
10.0000	2.522V	10.4025	10.09	-1.57	±1.00	slm@70.0F	Fail
15.0000	3.775V	15.6205	15.10	-2.60	±1.00	slm@70.0F	Fail
20.0000	5.030V	20.4539	20.12	-1.67	±1.00	slm@70.0F	Fail

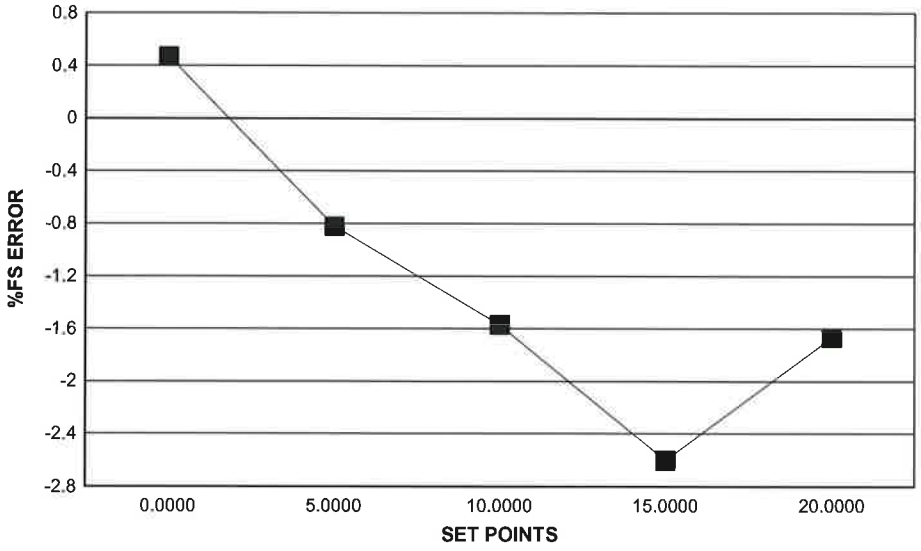

Calibration Gas: N2
Standard Pressure Conditions: 1 atm
Standard Temperature Conditions: see Units
Estimated Measurement Uncertainty: +/-0.3% rdg

END OF REPORT

Report of Calibration

As Left

ACCREDITED
CALIBRATION
CERT #2260.01

Procedure: Mass Flow Meter/Controller: 5pts: Rev. 1.0.A

UUT

Made by:	Aalborg
Model:	GFC37
Serial No.:	251111-5
ID No.:	SBI-259
Description:	Mass Flow Controller

Customer

STOVE BUILDER INTERNATIONAL INC.
250 RUE DE COPENHAGUE
ST-AUSTIN-DE-DESMAURES, QC
G3A 2H3

Calibration

Report No.:	AC15081457-251111-5
Adjusted:	Yes
Condition:	In Tolerance
Calibration Date:	3-Sep-2015
Calibration Due:	3-Sep-2016

Environment

Temperature:	26.1°C
Humidity:	53%RH

STATEMENT OF UNCERTAINTY: The reported expanded uncertainty of measurement is stated as the standard measurement uncertainty multiplied by the coverage factor K = 2, which for a normal distribution corresponds to a coverage probability of approximately 95 percent. Alpha Controls & Instrumentation Inc. certifies this instrument was calibrated on the date shown using standards traceable to NIST/NRC or accepted intrinsic standards and in compliance with ISO/IEC-17025:2005 and ANSI/NCSL Z540-1.

Any statement of compliance is made without taking measurement uncertainty into account and is based on UUT performance against required tolerance only. The customer must ensure equipment calibrated meets the intended use.

Tolerance is based on manufacturer specification if not stated otherwise. Calibration results relate to items calibrated only.

This report shall not be reproduced except in full without written approval of Alpha Controls and Instrumentation Inc.

STANDARDS

Instrument	Model	ID No./Serial No.	Traceability No.	Recall Date
Molbloc-L Laminar Element	Fluke 3E4	FLOW-3E4-01	1500183748	26-Jun-2016
Molbloc-L Laminar Element	Fluke 3E4	FLOW-3E4-02	1500183749	27-Jun-2016
Process Calibrator	Fluke 744	ELC-CAL-02	AC14101571-8223003	10-Nov-2015
Multimeter	Fluke 87 V	ELC-MTR-05	AC15031661-96010221	25-Mar-2016
Mass Flow Terminal	Fluke Molbox1+	FLOW-CAL-01	1500183843	30-Jun-2016

REMARKS:

LCD readings: 0.0, 5.1, 10.0, 15.1, 20.0

Adjusted trim pots.

Performed by: Slava Peciurov

Reviewed by: Anthony Morra

Report of Calibration
As Left

ACCREDITED
CALIBRATION
CERT #2260.01

UUT

Made by:	Aalborg
Model:	GFC37
Serial No.:	251111-5
ID No.:	SBI-259
Description:	Mass Flow Controller

Calibration

Report No.:	AC15081457-251111-5
Adjusted:	Yes
Condition:	In Tolerance
Calibration Date:	3-Sep-2015
Calibration Due:	3-Sep-2016

Test Description	Output	STD	UUT	Error (%FS)	Tolerance (%FS)	Units	P/F
0.0000	0.017V	0.0025	0.07	0.33	±1.00	slm@70.0F	Pass
5.0000	1.271V	5.0431	5.08	0.20	±1.00	slm@70.0F	Pass
10.0000	2.524V	9.9500	10.10	0.73	±1.00	slm@70.0F	Pass
15.0000	3.775V	15.1443	15.10	-0.22	±1.00	slm@70.0F	Pass
20.0000	5.027V	19.9439	20.11	0.82	±1.00	slm@70.0F	Pass

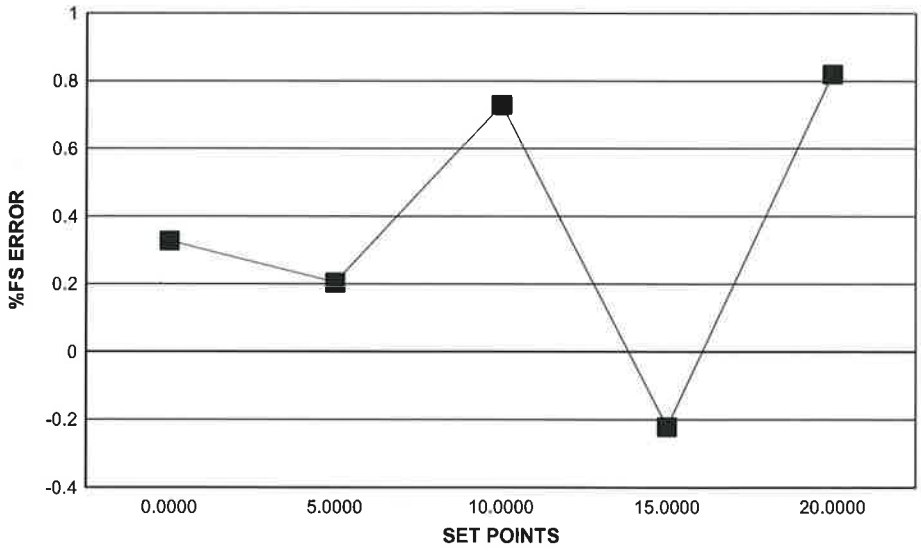

Calibration Gas: N2
Standard Pressure Conditions: 1 atm
Standard Temperature Conditions: see Units
Estimated Measurement Uncertainty: +/-0.3% rdg

END OF REPORT

Report of Calibration

As Found / As Left

ACCREDITED
CALIBRATION
CERT #2260.01

Procedure: Mass Flow Meter/Controller: 5pts: Rev. 1.0.A

UUT

Made by:	Aalborg
Model:	GFC37
Serial No.:	251111-3
ID No.:	SBI-260
Description:	Mass Flow Controller

Calibration

Report No.:	AC15101171-251111-3
Adjusted:	No
Condition:	In Tolerance
Calibration Date:	15-Oct-2015
Calibration Due:	15-Oct-2016

Customer

STOVE BUILDER INTERNATIONAL INC.
250 RUE DE COPENHAGUE
ST-AUSTIN-DE-DESMAURES, QC
G3A 2H3

Environment

Temperature:	22.4°C
Humidity:	34%RH

STATEMENT OF UNCERTAINTY: The reported expanded uncertainty of measurement is stated as the standard measurement uncertainty multiplied by the coverage factor K = 2, which for a normal distribution corresponds to a coverage probability of approximately 95 percent. Alpha Controls & Instrumentation Inc. certifies this instrument was calibrated on the date shown using standards traceable to NIST/NRC or accepted intrinsic standards and in compliance with ISO/IEC-17025:2005 and ANSI/NCSL Z540-1.

Any statement of compliance is made without taking measurement uncertainty into account and is based on UUT performance against required tolerance only. The customer must ensure equipment calibrated meets the intended use.

Tolerance is based on manufacturer specification if not stated otherwise. Calibration results relate to items calibrated only.

This report shall not be reproduced except in full without written approval of Alpha Controls and Instrumentation Inc.

STANDARDS

Instrument	Model	ID No./Serial No.	Traceability No.	Recall Date
Thermohygrometer Probe	Hart Scientific 2626-S	TRH-PRB-02	AC14121193-A71035	6-Jan-2016
Mass Flow Terminal	Fluke Molbox1+	FLOW-CAL-01	1500183843	30-Jun-2016

REMARKS:

None

Performed by: Slava Peciurov

Reviewed by: Anthony Morra

Report of Calibration
As Found / As Left

ACCREDITED
CALIBRATION
CERT #2260.01

UUT

Made by:	Aalborg
Model:	GFC37
Serial No.:	251111-3
ID No.:	SBI-260
Description:	Mass Flow Controller

Calibration

Report No.:	AC15101171-251111-3
Adjusted:	No
Condition:	In Tolerance
Calibration Date:	15-Oct-2015
Calibration Due:	15-Oct-2016

Test Description	Output	STD	UUT	Error (%FS)	Tolerance (%FS)	Units	P/F
0.0000	0.044V	0.0671	0.18	0.54	±1.00	slm@70.0F	Pass
5.0000	1.280V	5.1280	5.12	-0.04	±1.00	slm@70.0F	Pass
10.0000	2.534V	10.1627	10.14	-0.13	±1.00	slm@70.0F	Pass
15.0000	3.787V	15.2411	15.15	-0.47	±1.00	slm@70.0F	Pass
20.0000	5.042V	20.2898	20.17	-0.61	±1.00	slm@70.0F	Pass

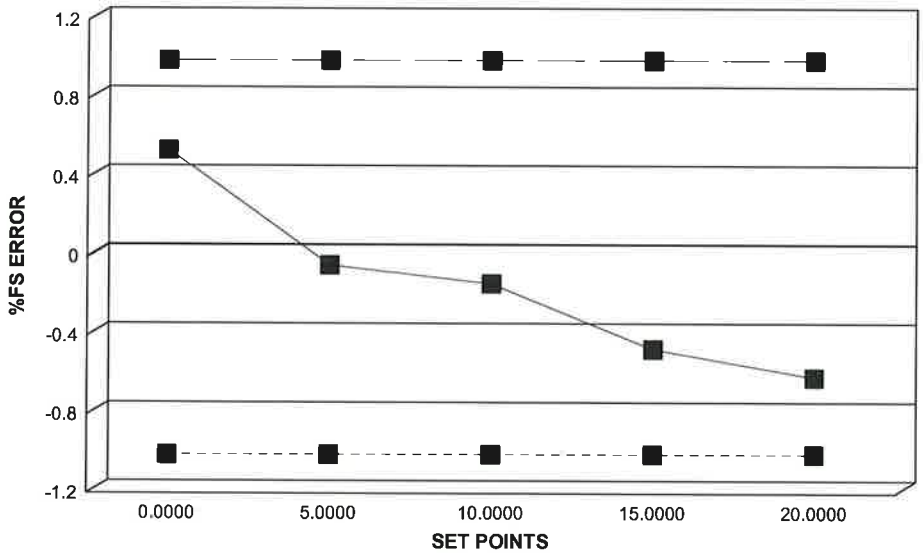

Calibration Gas: N2
Standard Pressure Conditions: 1 atm
Standard Temperature Conditions: see Units
Estimated Measurement Uncertainty: +/-0.3% rdg

END OF REPORT

Thermal Metering System Calibration
Y factor for Method 5G sampling

Manufacturer:	Rockwell International
Model:	S-275
Serial Number:	00938

Average Gas Meter y Factor
0.983

Calibration Date:	06-02-16
Calibrated by:	Vincent Pelletier
Calibration Frequency:	6-month
Next Calibration Due:	12-01-16
Instrument Range:	1.000 cfm
Standard Temp.:	68.1 oF
Standard Press.:	29.92 "Hg
Barometric Press.:	30.1 "Hg
Signature/Date:	Vincent Pelletier 2016-06-02

Previous Calibration Comparision

Date	N/A	Acceptable	
		Deviation (5%)	Deviation
y Factor	N/A	0	0.983
Acceptance	Out of Limits		

Current Calibration

Acceptable y Deviation	N/A
Maximum y Deviation	N/A
Acceptance	N/A

Reference Standard *		
Standard	Model	Standard Test Meter
Calibrator	S/N	07J264834
	Calib. Date	Sept. 02, 2015
	Calib. Value	0.9931 y factor (ref)

Calibration Parameters	Run 1	Run 2	Run 3
Vacuum ("Hg)	0.00	0.00	0.00
dH ("H2O)	0.00	0.00	0.00
Initial Reference Meter	700.100	705.285	711.504
Final Reference Meter	705.051	711.066	719.923
Initial DGM	501.239	506.448	512.697
Final DGM	506.211	512.369	521.162
Temp. Ref. Meter (°F), Tr	73.2	73.6	74.0
Temperature DGM (°F), Td	74.2	74.0	74.8
Time (Minutes)	51.0	30.0	30.0
Net Volume Ref. Meter, Vr	4.951	5.781	8.419
Net Volume DGM, Vd	4.972	5.921	8.465
Gas Meter y Factor =	**0.991**	**0.970**	**0.989**
Gas Meter y Factor Deviation (from avg.)	0.007	0.013	0.006
Orifice dH@	**0.00**	**0.00**	**0.00**
Orifice dH@ Deviation (from avg.)	0.000	0.000	0.000

where: 0.097490196

1. Deviation = |Average value for all runs - current run value|
2. y = [Vr x (y factor (ref)) x (Pb) x (Td + 460) / [Vd x (Pb + (dH / 13.6)) x (Tr + 460]
3. dH@ = 0.0317 x dH / (Pb (Td + 460)) x [(Tr + 460) x time) / Vr]^2

* Reference calibration is traceable to NIST through NIST Test # 40674, Kimble ASTM E1272

REFER TO INTERTEK'S DIRECTORY OF BUILDING PRODUCTS FOR DETAILED INFORMATION
SE RÉFÉRER AU RÉPERTOIRE DES PRODUITS HOMOLOGUÉS D'INTERTEK POUR PLUS D'INFORMATION

LISTED FACTORY BUILT FIREPLACE
FOYER PRÉFABRIQUÉ HOMOLOGUÉ

c ETL us Control number: 4002461
(July / Juillet 2016)
Intertek

STANDARDS / NORMES D'ESSAI:
Certified to / Certifié selon ULC S610
Certified to / Certifié selon UL 127
Certified to / Certifié selon CSA B415.1-10
Certified to/Certifié selon ASTM E2515-11

MODEL / MODÈLE:
FP15 / FP15A
WATERLOO

Serial Number / No. de Série: 1

FOR USE WITH WOOD ONLY — POUR UTILISATION AVEC BOIS SEULEMENT

CONTACT LOCAL BUILDING OFFICIALS ABOUT THE RESTRICTIONS AND INSTALLATION INSPECTION IN YOUR AREA.
COMMUNIQUER AVEC LES AUTORITÉS LOCALES DU BÂTIMENT ET DE LA PRÉVENTION DES INCENDIES AU SUJET DES RESTRICTIONS D'INSTALLATION DANS VOTRE SECTEUR.

INSTALL AND USE ONLY IN ACCORDANCE WITH SBI STOVE BUILDER INTERNATIONAL INSTALLATION AND OPERATION INSTRUCTIONS.
L'INSTALLATION ET L'OPERATION DOIT SE FAIRE SELON LES INSTRUCTIONS D'INSTALLATION ET D'UTILISATION DE SBI FABRICANT DE POÊLES INTERNATIONAL.

PREVENT HOUSE FIRES

- Use solid fuel only.

For safety, keep doors tightly closed.

- Do not overfire unit.
- Replace with only ceramic glass 4mm thick.
- Use only with listed factory-built chimney as per manufacturer's instructions.
- A non-combustible hearth extension with R Factor of 2 must be installed in front of unit extending 32 in (813 mm) in front and 8 in (203 mm) on each side of door opening. The fireplace must be raised of 12 inches to éliminate de R Factor and have a non-combustible hearth extension of 16 inches in front of the unit.
- Do not use a fireplace insert or other products not specified for use with this product.

Areas of the fireplace incorporating warm or cold air ducts shall be enclosed in accordance with manufacturer's instructions.
WARNING: This fireplace has not been tested with an unvented gas log set. To reduce risk of fire or injury, do not install an unvented gas log set into fireplace.
This wood heater needs periodic inspection and repair for proper operation.
Consult the owner's manual for further information.
It is against US federal regulations to operate this wood heater in a manner inconsistent with the operating instructions in the owner's manual.

PRÉVENEZ LES INCENDIES

- Utiliser uniquement du bois de chauffage.

Pour votre sécurité, maintenir les portes fermées de façon étanche.

- Ne pas surchauffer le foyer.
- Remplacer la vitre seulement avec un verre céramique de 4mm d'épaisseur.
- Pour utilisation seulement avec une cheminée préfabriquée homologuée tel que spécifié selon les instructions du manufacturier.
- Une protection do plancher incombustible avec un facteur R de 2 doit être installée à l'avant du foyer excédant de 32 po (813 mm) à l'avant et 8 po (203 mm) de chaque côté de l'ouverture de porte. Le foyer doit être surélevé de 12 pouces pour permettre une protection de plancher incombustible de 16 pouces sans facteur R devant le foyer.
- Ne pas utiliser de foyer encastrable ou autres produits qui ne sont pas conçus précisément pour être utilisés avec le présent foyer.

Les zones du foyer intégrant des conduits d'air chaud ou froid doivent être installées en accord avec les instructions du manufacturier.
ATTENTION: Ce foyer n'a pas été mis à l'essai avec un ensemble de bûches décoratives à gaz non ventilé. Pour réduire les risques de feu ou de blessures, ne pas installer d'ensemble de bûches décoratives à gaz non ventilé dans ce foyer.
Cet appareil requiert des inspections et réparations périodiques. Consulter le manuel de l'utilisateur pour plus d'information.
Opérer cet appareil de chauffage de façon inconsistente par rapport au manuel de l'utilisateur consiste une violation de la loi fédérale (USA).

MINIMUM CLEARANCES TO COMBUSTIBLE MATERIALS /
DÉGAGEMENTS MINIMUM AUX MATÉRIAUX COMBUSTIBLES

Sidewall / Mur latéral [1] :	24 in (610 mm)	Side facing / Parement latéral [2] :	8 in (203 mm)
Non-Combustible shelf (from floor) / Tablette incombustible (du sol) [2][3] :	in (mm)	Ceiling (from floor) / Plafond (à partir du plancher) [3] :	84 in. (2134 mm)

[1] From door opening. / À partir de l'ouverture de la porte.
[2] Subject to a maximum protrusion (consult owner's manual). / Sujet à une saillie maximale (consultez le manuel d'instructions).
[3] If the fireplace is elevated, the clearances to the combustible shelf and ceiling must be increased by an equivalent value. / Si le foyer est surélevé, les dégagements à la tablette combustible et au plafond doivent être augmentés d'une valeur équivalente.

Blower / Ventilateur: (115V, 0.8A, 60Hz)

PROCEDURE TO FOLLOW IN CASE OF RUN-AWAY FIRE	EN CAS D'INCENDIE DE CHEMINÉE
1) Keep doors closed 2) Close all combustion air controls	1) Maintenir les portes fermées 2) Fermer tous les dispositifs d'admission d'air

U.S. ENVIRONMENTAL PROTECTION AGENCY Certified to comply with 2020 particulate emission standards using cord wood.
AGENCE DE PROTECTION DE L'ENVIRONNEMENT DES É.U. (EPA). Conforme aux normes d'émission de particules de 2020 avec bûche de bois.

Tested and certified in compliance with CFR 40 part 60, subpart AAA, section 60.534(a)(1(ii))
Weighted average emission rate / Moyenne pondérée des émissions: 1.6 g/h

WARNING: This product can expose you to carbon monoxide, which is known to the State of California to cause cancer, birth defects or other reproductive harm.
(For more information go to www.p65warnings.ca.gov)

CAUTION

- HOT WHILE IN OPERATION.
- DO NOT TOUCH. KEEP CHILDREN, CLOTHING AND FURNITURE AWAY.
- CONTACT MAY CAUSE SKIN BURNS. SEE NAME-PLATE AND INSTRUCTIONS.
- THIS FIREPLACE NEEDS AIR FOR GOOD OPERATION.
- WHEN A FIRE IS BURNING IN THE FIREPLACE, FRESH AIR MUST BE SUPPLIED TO THE ROOM WHERE THE FIREPLACE IS LOCATED, FAILURE TO PROVIDE THIS MAY STARVE OTHER FUEL BURNING APPLIANCE FROM AN ADEQUATE AIR SUPPLY.

ATTENTION

- CHAUD EN FONCTIONNEMENT.
- NE PAS TOUCHER. GARDER LES ENFANTS, LES VÊTEMENTS ET LES MEUBLES ÉLOIGNÉS.
- UN CONTACT AVEC LA PEAU PEUT OCCASIONNER DES BRÛLURES. VOIR LES INSTRUCTIONS.
- CE FOYER A BESOIN D'AIR POUR SON BON FONCTIONNEMENT.
- LORSQUE LE FOYER BRÛLE, UN APPORT D'AIR SUPPLÉMENTAIRE DOIT ÊTRE PRÉVU DANS LA PIÈCE, UN MANQUE D'AIR D'APPOINT POURRAIT PRIVER LES AUTRES APPAREILS DE COMBUSTION D'UNE ALIMENTATION D'AIR ADÉQUATE.

Made in La Guadeloupe (Qc), Canada
13/08/2021 (# test)

SBI
Fabricant de poêles international
Stove Builder International

Fabriqué à La Guadeloupe (Qc), Canada
13/08/2021 (# test)
27679

Intertek

REFER TO INTERTEK'S DIRECTORY OF BUILDING PRODUCTS FOR DETAILED INFORMATION
SE RÉFÉRER AU RÉPERTOIRE DES PRODUITS HOMOLOGUÉS D'INTERTEK POUR PLUS D'INFORMATION

STANDARDS / NORMES D'ESSAI:
Certified to / Certifié selon ULC S610
Certified to / Certifié selon UL 127
Certified to / Certifié selon CSA B415.1-10
Certified to/Certifié selon ASTM E2515-11

Control number: 4002461
(July / Juillet 2016)

LISTED FACTORY BUILT FIREPLACE
FOYER PRÉFABRIQUÉ HOMOLOGUÉ

MODEL / MODÈLE:
HE350

Serial Number / No. de Série: 1

FOR USE WITH WOOD ONLY — POUR UTILISATION AVEC BOIS SEULEMENT

CONTACT LOCAL BUILDING OFFICIALS ABOUT THE RESTRICTIONS AND INSTALLATION INSPECTION IN YOUR AREA.
COMMUNIQUER AVEC LES AUTORITÉS LOCALES DU BÂTIMENT ET DE LA PRÉVENTION DES INCENDIES AU SUJET DES RESTRICTIONS D'INSTALLATION DANS VOTRE SECTEUR.

INSTALL AND USE ONLY IN ACCORDANCE WITH SBI STOVE BUILDER INTERNATIONAL INSTALLATION AND OPERATION INSTRUCTIONS.
L'INSTALLATION ET L'OPERATION DOIT SE FAIRE SELON LES INSTRUCTIONS D'INSTALLATION ET D'UTILISATION DE SBI FABRICANT DE POÊLES INTERNATIONAL.

PREVENT HOUSE FIRES

- Use solid fuel only.

For safety, keep doors tightly closed.

- Do not overfire unit.
- Replace with only ceramic glass 4mm thick.
- Use only with listed factory-built chimney as per manufacturer's instructions.
- A non-combustible hearth extension must be installed in front of unit extending 32 in (813 mm) in front and 8 in (203 mm) on each side of door opening.
-
- Do not use a fireplace insert or other products not specified for use with this product.

Areas of the fireplace incorporating warm or cold air ducts shall be enclosed in accordance with manufacturer's instructions.
WARNING: This fireplace has not been tested with an unvented gas log set. To reduce risk of fire or injury, do not install an unvented gas log set into fireplace.
This wood heater needs periodic inspection and repair for proper operation. Consult the owner's manual for further information.It is against US federal regulations to operate this wood heater in a manner inconsistent with the operating instructions in the owner's manual.

PRÉVENEZ LES INCENDIES

- Utiliser uniquement du bois de chauffage.

Pour votre sécurité, maintenir les portes fermées de façon étanche.

- Ne pas surchauffer le foyer.
- Remplacer la vitre seulement avec un verre céramique de 4mm d'épaisseur.
- Pour utilisation seulement avec une cheminée préfabriquée homologuée tel que spécifié selon les instructions du manufacturier.
- Une protection de plancher incombustible doit être installée à l'avant du foyer excédant de 32 po (813 mm) à l'avant et 8 po (203 mm) de chaque côté de l'ouverture de porte.
-
- Ne pas utiliser de foyer encastrable ou autres produits qui ne sont pas conçus précisément pour être utilisés avec le présent foyer.

Les zones du foyer intégrant des conduits d'air chaud ou froid doivent être installées en accord avec les instructions du manufacturier.
ATTENTION: Ce foyer n'a pas été mis à l'essai avec un ensemble de bûches décoratives à gaz non ventilé. Pour réduire les risques de feu ou de blessures, ne pas installer d'ensemble de bûches décoratives à gaz non ventilé dans ce foyer.
Cet appareil requiert des inspections et réparations périodiques. Consulter le manuel de l'utilisateur pour plus d'information.Opérer cet appareil de chauffage de façon inconsistente par rapport au manuel de l'utilisateur consiste une violation de la loi fédérale (USA).

MINIMUM CLEARANCES TO COMBUSTIBLE MATERIALS / DÉGAGEMENTS MINIMUM AUX MATÉRIAUX COMBUSTIBLES

Sidewall / Mur latéral [1] :	**24 in (610 mm)**	**Side facing / Parement latéral** [2] :	**8 in (203 mm)**
Combustible shelf (from floor) / Tablette combustible (du sol) [2][3] :	**in (mm)**	**Ceiling (from floor) / Plafond (à partir du plancher)** [3] :	**84 in. (2134 mm)**

[1] From door opening. / À partir de l'ouverture de la porte.
[2] Subject to a maximum protrusion (consult owner's manual). / Sujet à une saillie maximale (consultez le manuel d'instructions).
[3] If the fireplace is elevated, the clearances to the combustible shelf and ceiling must be increased by an equivalent value. / Si le foyer est surélevé, les dégagements à la tablette combustible et au plafond doivent être augmentés d'une valeur équivalente.

Blower / Ventilateur: (115V, 0.8A, 60Hz)

PROCEDURE TO FOLLOW IN CASE OF RUN-AWAY FIRE	EN CAS D'INCENDIE DE CHEMINÉE
1) Keep doors closed	1) Maintenir les portes fermées
2) Close all combustion air controls	2) Fermer tous les dispositifs d'admission d'air

U.S. ENVIRONMENTAL PROTECTION AGENCY Certified to comply with 2020 particulate emission standards using cord wood.
AGENCE DE PROTECTION DE L'ENVIRONNEMENT DES É.U. (EPA). Conforme aux normes d'émission de particules de 2020 avec bûche de bois.
Weighted average emission rate / Moyenne pondérée des émissions: 1.6 g/h

Tested and certified in compliance with CFR 40 part 60, subpart AAA, section 60.534(a)(1(ii))

WARNING: This product can expose you to carbon monoxide, which is known to the State of California to cause cancer, birth defects or other reproductive harm. (For more information go to www.p65warnings.ca.gov)



CAUTION

- HOT WHILE IN OPERATION.
- DO NOT TOUCH. KEEP CHILDREN, CLOTHING AND FURNITURE AWAY.
- CONTACT MAY CAUSE SKIN BURNS. SEE NAME-PLATE AND INSTRUCTIONS.
- THIS FIREPLACE NEEDS AIR FOR GOOD OPERATION.
- WHEN A FIRE IS BURNING IN THE FIREPLACE, FRESH AIR MUST BE SUPPLIED TO THE ROOM WHERE THE FIREPLACE IS LOCATED, FAILURE TO PROVIDE THIS MAY STARVE OTHER FUEL BURNING APPLIANCE FROM AN ADEQUATE AIR SUPPLY.

ATTENTION

- CHAUD EN FONCTIONNEMENT.
- NE PAS TOUCHER. GARDER LES ENFANTS, LES VÊTEMENTS ET LES MEUBLES ÉLOIGNÉS.
- UN CONTACT AVEC LA PEAU PEUT OCCASIONNER DES BRÛLURES. VOIR LES INSTRUCTIONS.
- CE FOYER A BESOIN D'AIR POUR SON BON FONCTIONNEMENT.
- LORSQUE LE FOYER BRÛLE, UN APPORT D'AIR SUPPLÉMENTAIRE DOIT ÊTRE PRÉVU DANS LA PIÈCE, UN MANQUE D'AIR D'APPOINT POURRAIT PRIVER LES AUTRES APPAREILS DE COMBUSTION D'UNE ALIMENTATION D'AIR ADÉQUATE.

Made in La Guadeloupe (Qc), Canada
13/08/2021 (# test)

VENTIS

Fabriqué à La Guadeloupe (Qc), Canada
13/08/2021 (# test)
27677

REFER TO INTERTEK'S DIRECTORY OF BUILDING PRODUCTS FOR DETAILED INFORMATION
SE RÉFÉRER AU RÉPERTOIRE DES PRODUITS HOMOLOGUÉS D'INTERTEK POUR PLUS D'INFORMATION

LISTED FACTORY BUILT FIREPLACE
FOYER PRÉFABRIQUÉ HOMOLOGUÉ

Control number: 4002461
(July / Juillet 2016)

Intertek

STANDARDS / NORMES D'ESSAI:
Certified to / Certifié selon ULC S610
Certified to / Certifié selon UL 127
Certified to / Certifié selon CSA B415.1-10
Certified to/Certifié selon ASTM E2515-11

MODEL / MODÈLE:
HORIZON

Serial Number
No. de Série: 1

FOR USE WITH WOOD ONLY — POUR UTILISATION AVEC BOIS SEULEMENT

CONTACT LOCAL BUILDING OFFICIALS ABOUT THE RESTRICTIONS AND INSTALLATION INSPECTION IN YOUR AREA.
COMMUNIQUER AVEC LES AUTORITÉS LOCALES DU BÂTIMENT ET DE LA PRÉVENTION DES INCENDIES AU SUJET DES RESTRICTIONS D'INSTALLATION DANS VOTRE SECTEUR.

INSTALL AND USE ONLY IN ACCORDANCE WITH SBI STOVE BUILDER INTERNATIONAL INSTALLATION AND OPERATION INSTRUCTIONS.
L'INSTALLATION ET L'OPERATION DOIT SE FAIRE SELON LES INSTRUCTIONS D'INSTALLATION ET D'UTILISATION DE SBI FABRICANT DE POÊLES INTERNATIONAL.

PREVENT HOUSE FIRES

- Use solid fuel only.

For safety, keep doors tightly closed.

- Do not overfire unit.
- Replace with only ceramic glass 4mm thick.
- Use only with listed factory-built chimney as per manufacturer's instructions.
- A non-combustible hearth extension with R Factor of 2 must be installed in front of unit extending 32 in (813 mm) in front and 8 in (203 mm) on each side of door opening. The fireplace must be raised of 12 inches to éliminate de R Factor and have a non-combustible hearth extension of 16 inches in front of the unit.
- Do not use a fireplace insert or other products not specified for use with this product.

Areas of the fireplace incorporating warm or cold air ducts shall be enclosed in accordance with manufacturer's instructions.
WARNING: This fireplace has not been tested with an unvented gas log set. To reduce risk of fire or injury, do not install an unvented gas log set into fireplace.
This wood heater needs periodic inspection and repair for proper operation.
Consult the owner's manual for further information.
It is against US federal regulations to operate this wood heater in a manner inconsistent with the operating instructions in the owner's manual.

PRÉVENEZ LES INCENDIES

- Utiliser uniquement du bois de chauffage.

Pour votre sécurité, maintenir les portes fermées de façon étanche.

- Ne pas surchauffer le foyer.
- Remplacer la vitre seulement avec un verre céramique de 4mm d'épaisseur.
- Pour utilisation seulement avec une cheminée préfabriquée homologuée tel que spécifié selon les instructions du manufacturier.
- Une protection de plancher incombustible avec un facteur R de 2 doit être installée à l'avant du foyer excédant de 32 po (813 mm) à l'avant et 8 po (203 mm) de chaque côté de l'ouverture de porte. Le foyer doit être surélevé de 12 pouces pour permettre une protection de plancher incombustible de 16 pouces sans facteur R devant le foyer.
- Ne pas utiliser de foyer encastrable ou autres produits qui ne sont pas conçus précisément pour être utilisés avec le présent foyer.

Les zones du foyer intégrant des conduits d'air chaud ou froid doivent être installées en accord avec les instructions du manufacturier.
ATTENTION: Ce foyer n'a pas été mis à l'essai avec un ensemble de bûches décoratives à gaz non ventilé. Pour réduire les risques de feu ou de blessures, ne pas installer d'ensemble de bûches décoratives à gaz non ventilé dans ce foyer.
Cet appareil requiert des inspections et réparations périodiques. Consulter le manuel de l'utilisateur pour plus d'information.
Opérer cet appareil de chauffage de façon inconsistente par rapport au manuel de l'utilisateur consiste une violation de la loi fédérale (USA).

MINIMUM CLEARANCES TO COMBUSTIBLE MATERIALS /
DÉGAGEMENTS MINIMUM AUX MATÉRIAUX COMBUSTIBLES

Sidewall / Mur latéral [1] :	24 in (610 mm)	Side facing / Parement latéral [2] :	8 in (203 mm)
Non-Combustible shelf (from floor) / Tablette incombustible (du sol) [2][3] :	in (mm)	Ceiling (from floor) / Plafond (à partir du plancher) [3] :	84 in. (2134 mm)

[1] From door opening. / À partir de l'ouverture de la porte.
[2] Subject to a maximum protrusion (consult owner's manual). / Sujet à une saillie maximale (consultez le manuel d'instructions).
[3] If the fireplace is elevated, the clearances to the combustible shelf and ceiling must be increased by an equivalent value. / Si le foyer est surélevé, les dégagements à la tablette combustible et au plafond doivent être augmentés d'une valeur équivalente.

Blower / Ventilateur: (115V, 0.8A, 60Hz)

PROCEDURE TO FOLLOW IN CASE OF RUN-AWAY FIRE	EN CAS D'INCENDIE DE CHEMINÉE
1) Keep doors closed	1) Maintenir les portes fermées
2) Close all combustion air controls	2) Fermer tous les dispositifs d'admission d'air

U.S. ENVIRONMENTAL PROTECTION AGENCY Certified to comply with 2020 particulate emission standards using cord wood.
AGENCE DE PROTECTION DE L'ENVIRONNEMENT DES É.U. (EPA). Conforme aux normes d'émission de particules de 2020 avec bûche de bois.

Tested and certified in compliance with CFR 40 part 60, subpart AAA, section 60.534(a)(1(ii))
Weighted average emission rate / Moyenne pondérée des émissions: 1.6 g/h

WARNING: This product can expose you to carbon monoxide, which is known to the State of California to cause cancer, birth defects or other reproductive harm.
(For more information go to www.p65warnings.ca.gov)

CAUTION

- HOT WHILE IN OPERATION.
- DO NOT TOUCH. KEEP CHILDREN, CLOTHING AND FURNITURE AWAY.
- CONTACT MAY CAUSE SKIN BURNS. SEE NAME-PLATE AND INSTRUCTIONS.
- THIS FIREPLACE NEEDS AIR FOR GOOD OPERATION.
- WHEN A FIRE IS BURNING IN THE FIREPLACE, FRESH AIR MUST BE SUPPLIED TO THE ROOM WHERE THE FIREPLACE IS LOCATED, FAILURE TO PROVIDE THIS MAY STARVE OTHER FUEL BURNING APPLIANCE FROM AN ADEQUATE AIR SUPPLY.

ATTENTION

- CHAUD EN FONCTIONNEMENT.
- NE PAS TOUCHER. GARDER LES ENFANTS, LES VÊTEMENTS ET LES MEUBLES ÉLOIGNÉS.
- UN CONTACT AVEC LA PEAU PEUT OCCASIONNER DES BRÛLURES. VOIR LES INSTRUCTIONS.
- CE FOYER A BESOIN D'AIR POUR SON BON FONCTIONNEMENT.
- LORSQUE LE FOYER BRÛLE, UN APPORT D'AIR SUPPLÉMENTAIRE DOIT ÊTRE PRÉVU DANS LA PIÈCE, UN MANQUE D'AIR D'APPOINT POURRAIT PRIVER LES AUTRES APPAREILS DE COMBUSTION D'UNE ALIMENTATION D'AIR ADÉQUATE.

Made in La Guadeloupe (Qc), Canada
13/08/2021 (# test)

SBI
Fabricant de poêles international
Stove Builder International

Fabriqué à La Guadeloupe (Qc), Canada
13/08/2021 (# test)
27678

REFER TO INTERTEK'S DIRECTORY OF BUILDING PRODUCTS FOR DETAILED INFORMATION
SE RÉFÉRER AU RÉPERTOIRE DES PRODUITS HOMOLOGUÉS D'INTERTEK POUR PLUS D'INFORMATION

LISTED FACTORY BUILT FIREPLACE
FOYER PRÉFABRIQUÉ HOMOLOGUÉ

c ETL us Control number: 4002461
(July / Juillet 2016)
Intertek

STANDARDS / NORMES D'ESSAI:
Certified to / Certifié selon ULC S610
Certified to / Certifié selon UL 127
Certified to / Certifié selon CSA B415.1-10
Certified to/Certifié selon ASTM E2515-11

MODEL / MODÈLE:
MONACO XL

Serial Number / No. de Série: 1

FOR USE WITH WOOD ONLY — POUR UTILISATION AVEC BOIS SEULEMENT

CONTACT LOCAL BUILDING OFFICIALS ABOUT THE RESTRICTIONS AND INSTALLATION INSPECTION IN YOUR AREA.
COMMUNIQUER AVEC LES AUTORITÉS LOCALES DU BÂTIMENT ET DE LA PRÉVENTION DES INCENDIES AU SUJET DES RESTRICTIONS D'INSTALLATION DANS VOTRE SECTEUR.

INSTALL AND USE ONLY IN ACCORDANCE WITH SBI STOVE BUILDER INTERNATIONAL INSTALLATION AND OPERATION INSTRUCTIONS.
L'INSTALLATION ET L'OPERATION DOIT SE FAIRE SELON LES INSTRUCTIONS D'INSTALLATION ET D'UTILISATION DE SBI FABRICANT DE POÊLES INTERNATIONAL.

PREVENT HOUSE FIRES

- Use solid fuel only.

For safety, keep doors tightly closed.

- Do not overfire unit.
- Replace with only ceramic glass 4mm thick.
- Use only with listed factory-built chimney as per manufacturer's instructions.
- A non-combustible hearth extension with R Factor of 2 must be installed in front of unit extending 32 in (813 mm) in front and 8 in (203 mm) on each side of door opening. The fireplace must be raised of 12 inches to éliminate de R Factor and have a non-combustible hearth extension of 16 inches in front of the unit.
- Do not use a fireplace insert or other products not specified for use with this product.

Areas of the fireplace incorporating warm or cold air ducts shall be enclosed in accordance with manufacturer's instructions.
WARNING: This fireplace has not been tested with an unvented gas log set. To reduce risk of fire or injury, do not install an unvented gas log set into fireplace.
This wood heater needs periodic inspection and repair for proper operation.
Consult the owner's manual for further information.
It is against US federal regulations to operate this wood heater in a manner inconsistent with the operating instructions in the owner's manual.

PRÉVENEZ LES INCENDIES

- Utiliser uniquement du bois de chauffage.

Pour votre sécurité, maintenir les portes fermées de façon étanche.

- Ne pas surchauffer le foyer.
- Remplacer la vitre seulement avec un verre céramique de 4mm d'épaisseur.
- Pour utilisation seulement avec une cheminée préfabriquée homologuée tel que spécifié selon les instructions du manufacturier.
- Une protection de plancher incombustible avec un facteur R de 2 doit être installée à l'avant du foyer excédant de 32 po (813 mm) à l'avant et 8 po (203 mm) de chaque côté de l'ouverture de porte. Le foyer doit être surélevé de 12 pouces pour permettre une protection de plancher incombustible de 16 pouces sans facteur R devant le foyer.
- Ne pas utiliser de foyer encastrable ou autres produits qui ne sont pas conçus précisément pour être utilisés avec le présent foyer.

Les zones du foyer intégrant des conduits d'air chaud ou froid doivent être installées en accord avec les instructions du manufacturier.
ATTENTION: Ce foyer n'a pas été mis à l'essai avec un ensemble de bûches décoratives à gaz non ventilé. Pour réduire les risques de feu ou de blessures, ne pas installer d'ensemble de bûches décoratives à gaz non ventilé dans ce foyer.
Cet appareil requiert des inspections et réparations périodiques. Consulter le manuel de l'utilisateur pour plus d'information.
Opérer cet appareil de chauffage de façon inconsistente par rapport au manuel de l'utilisateur consiste une violation de la loi fédérale (USA).

MINIMUM CLEARANCES TO COMBUSTIBLE MATERIALS / DÉGAGEMENTS MINIMUM AUX MATÉRIAUX COMBUSTIBLES

Sidewall / Mur latéral [1] :	24 in (610 mm)	Side facing / Parement latéral [2] :	8 in (203 mm)
Non-Combustible shelf (from floor) / Tablette incombustible (du sol) [2][3] :	in (mm)	Ceiling (from floor) / Plafond (à partir du plancher) [3] :	84 in. (2134 mm)

[1] From door opening. / À partir de l'ouverture de la porte.
[2] Subject to a maximum protrusion (consult owner's manual). / Sujet à une saillie maximale (consultez le manuel d'instructions).
[3] If the fireplace is elevated, the clearances to the combustible shelf and ceiling must be increased by an equivalent value. / Si le foyer est surélevé, les dégagements à la tablette combustible et au plafond doivent être augmentés d'une valeur équivalente.

Blower / Ventilateur: (115V, 0.8A, 60Hz)

PROCEDURE TO FOLLOW IN CASE OF RUN-AWAY FIRE	EN CAS D'INCENDIE DE CHEMINÉE
1) Keep doors closed 2) Close all combustion air controls	1) Maintenir les portes fermées 2) Fermer tous les dispositifs d'admission d'air

U.S. ENVIRONMENTAL PROTECTION AGENCY Certified to comply with 2020 particulate emission standards using cord wood.
AGENCE DE PROTECTION DE L'ENVIRONNEMENT DES É.U. (EPA). Conforme aux normes d'émission de particules de 2020 avec bûche de bois.

Tested and certified in compliance with CFR 40 part 60, subpart AAA, section 60.534(a)(1(ii))
Weighted average emission rate / Moyenne pondérée des émissions: 1.6 g/h

WARNING: This product can expose you to carbon monoxide, which is known to the State of California to cause cancer, birth defects or other reproductive harm.
(For more information go to www.p65warnings.ca.gov)

CAUTION

- HOT WHILE IN OPERATION.
- DO NOT TOUCH. KEEP CHILDREN, CLOTHING AND FURNITURE AWAY.
- CONTACT MAY CAUSE SKIN BURNS. SEE NAME-PLATE AND INSTRUCTIONS.
- THIS FIREPLACE NEEDS AIR FOR GOOD OPERATION.
- WHEN A FIRE IS BURNING IN THE FIREPLACE, FRESH AIR MUST BE SUPPLIED TO THE ROOM WHERE THE FIREPLACE IS LOCATED, FAILURE TO PROVIDE THIS MAY STARVE OTHER FUEL BURNING APPLIANCE FROM AN ADEQUATE AIR SUPPLY.

ATTENTION

- CHAUD EN FONCTIONNEMENT.
- NE PAS TOUCHER. GARDER LES ENFANTS, LES VÊTEMENTS ET LES MEUBLES ÉLOIGNÉS.
- UN CONTACT AVEC LA PEAU PEUT OCCASIONNER DES BRÛLURES. VOIR LES INSTRUCTIONS.
- CE FOYER A BESOIN D'AIR POUR SON BON FONCTIONNEMENT.
- LORSQUE LE FOYER BRÛLE, UN APPORT D'AIR SUPPLÉMENTAIRE DOIT ÊTRE PRÉVU DANS LA PIÈCE, UN MANQUE D'AIR D'APPOINT POURRAIT PRIVER LES AUTRES APPAREILS DE COMBUSTION D'UNE ALIMENTATION D'AIR ADÉQUATE.

Made in La Guadeloupe (Qc), Canada
13/08/2021 (# test)

SBI
Fabricant de poêles international
Stove Builder International

Fabriqué à La Guadeloupe (Qc), Canada
13/08/2021 (# test)
27690

REFER TO INTERTEK'S DIRECTORY OF BUILDING PRODUCTS FOR DETAILED INFORMATION
SE RÉFÉRER AU RÉPERTOIRE DES PRODUITS HOMOLOGUÉS D'INTERTEK POUR PLUS D'INFORMATION

Intertek

STANDARDS / NORMES D'ESSAI:
Certified to / Certifié selon ULC S610
Certified to / Certifié selon UL 127
Certified to / Certifié selon CSA B415.1-10
Certified to/Certifié selon ASTM E2515-11

Control number: 4002461
(March / Mars 2020)

LISTED FACTORY BUILT FIREPLACE
FOYER PRÉFABRIQUÉ HOMOLOGUÉ

MODEL / MODÈLE: St.Clair 4300

FOR USE WITH WOOD ONLY — POUR UTILISATION AVEC BOIS SEULEMENT

CONTACT LOCAL BUILDING OFFICIALS ABOUT THE RESTRICTIONS AND INSTALLATION INSPECTION IN YOUR AREA.
COMMUNIQUER AVEC LES AUTORITÉS LOCALES DU BÂTIMENT ET DE LA PRÉVENTION DES INCENDIES AU SUJET DES RESTRICTIONS D'INSTALLATION DANS VOTRE SECTEUR.

Serial Number / No. de Série: 1

INSTALL AND USE ONLY IN ACCORDANCE WITH SBI STOVE BUILDER INTERNATIONAL INSTALLATION AND OPERATION INSTRUCTIONS.
L'INSTALLATION ET L'OPERATION DOIT SE FAIRE SELON LES INSTRUCTIONS D'INSTALLATION ET D'UTILISATION DE SBI FABRICANT DE POÊLES :INTERNATIONAL.

PREVENT HOUSE FIRES

- Use solid fuel only.

For safety, keep doors tightly closed.

- Do not overfire unit.
- Replace with only ceramic glass 4mm thick.
- Use only with listed factory-built chimney as per manufacturer's instructions.
- A non-combustible hearth extension must be installed in front of unit extending 32 in (813 mm) in front and 8 in (203 mm) on each side of door opening.
-
- Do not use a fireplace insert or other products not specified for use with this product.

Areas of the fireplace incorporating warm or cold air ducts shall be enclosed in accordance with manufacturer's instructions.
WARNING: This fireplace has not been tested with an unvented gas log set. To reduce risk of fire or injury, do not install an unvented gas log set into fireplace.
This wood heater needs periodic inspection and repair for proper operation. Consult the owner's manual for further information.It is against US federal regulations to operate this wood heater in a manner inconsistent with the operating instructions in the owner's manual.

PRÉVENEZ LES INCENDIES

- Utiliser uniquement du bois de chauffage.

Pour votre sécurité, maintenir les portes fermées de façon étanche.

- Ne pas surchauffer le foyer.
- Remplacer la vitre seulement avec un verre céramique de 4mm d'épaisseur.
- Pour utilisation seulement avec une cheminée préfabriquée homologuée tel que spécifié selon les instructions du manufacturier.
- Une protection de plancher incombustible doit être installée à l'avant du foyer excédant de 32 po (813 mm) à l'avant et 8 po (203 mm) de chaque côté de l'ouverture de porte.
-
- Ne pas utiliser de foyer encastrable ou autres produits qui ne sont pas conçus précisément pour être utilisés avec le présent foyer.

Les zones du foyer intégrant des conduits d'air chaud ou froid doivent être installées en accord avec les instructions du manufacturier.
ATTENTION: Ce foyer n'a pas été mis à l'essai avec un ensemble de bûches décoratives à gaz non ventilé. Pour réduire les risques de feu ou de blessures, ne pas installer d'ensemble de bûches décoratives à gaz non ventilé dans ce foyer.
Cet appareil requiert des inspections et réparations périodiques. Consulter le manuel de l'utilisateur pour plus d'information.Opérer cet appareil de chauffage de façon inconsistente par rapport au manuel de l'utilisateur consiste une violation de la loi fédérale (USA).

MINIMUM CLEARANCES TO COMBUSTIBLE MATERIALS / DÉGAGEMENTS MINIMUM AUX MATÉRIAUX COMBUSTIBLES

Sidewall / Mur latéral [1] :	24 in (610 mm)	**Side facing / Parement latéral** [2] :	8 in (203 mm)
Combustible shelf (from floor) / Tablette combustible (du sol) [2][3] :	in (mm)	**Ceiling (from floor) / Plafond (à partir du plancher)** [3] :	84 in. (2134 mm)

[1] From door opening. / À partir de l'ouverture de la porte.
[2] Subject to a maximum protrusion (consult owner's manual). / Sujet à une saillie maximale (consultez le manuel d'instructions).
[3] If the fireplace is elevated, the clearances to the combustible shelf and ceiling must be increased by an equivalent value. / Si le foyer est surélevé, les dégagements à la tablette combustible et au plafond doivent être augmentés d'une valeur équivalente.

Blower / Ventilateur: (115V, 0.8A, 60Hz)

PROCEDURE TO FOLLOW IN CASE OF RUN-AWAY FIRE	EN CAS D'INCENDIE DE CHEMINÉE
1) Keep doors closed	1) Maintenir les portes fermées
2) Close all combustion air controls	2) Fermer tous les dispositifs d'admission d'air

U.S. ENVIRONMENTAL PROTECTION AGENCY Certified to comply with 2020 particulate emission standards using cord wood.
AGENCE DE PROTECTION DE L'ENVIRONNEMENT DES É.U. (EPA). Conforme aux normes d'émission de particules de 2020 avec bûche de bois.
Weighted average emission rate / Moyenne pondérée des émissions: 1.6 g/h

Tested and certified in compliance with CFR 40 part 60, subpart AAA, section 60.534(a)(1(ii))

WARNING: This product can expose you to carbon monoxide, which is known to the State of California to cause cancer, birth defects or other reproductive harm. (For more information go to www.p65warnings.ca.gov)



CAUTION

- HOT WHILE IN OPERATION.
- DO NOT TOUCH. KEEP CHILDREN, CLOTHING AND FURNITURE AWAY.
- CONTACT MAY CAUSE SKIN BURNS. SEE NAME-PLATE AND INSTRUCTIONS.
- THIS FIREPLACE NEEDS AIR FOR GOOD OPERATION.
- WHEN A FIRE IS BURNING IN THE FIREPLACE, FRESH AIR MUST BE SUPPLIED TO THE ROOM WHERE THE FIREPLACE IS LOCATED, FAILURE TO PROVIDE THIS MAY STARVE OTHER FUEL BURNING APPLIANCE FROM AN ADEQUATE AIR SUPPLY.

ATTENTION

- CHAUD EN FONCTIONNEMENT.
- NE PAS TOUCHER. GARDER LES ENFANTS, LES VÊTEMENTS ET LES MEUBLES ÉLOIGNÉS.
- UN CONTACT AVEC LA PEAU PEUT OCCASIONNER DES BRÛLURES. VOIR LES INSTRUCTIONS.
- CE FOYER A BESOIN D'AIR POUR SON BON FONCTIONNEMENT.
- LORSQUE LE FOYER BRÛLE, UN APPORT D'AIR SUPPLÉMENTAIRE DOIT ÊTRE PRÉVU DANS LA PIÈCE, UN MANQUE D'AIR D'APPOINT POURRAIT PRIVER LES AUTRES APPAREILS DE COMBUSTION D'UNE ALIMENTATION D'AIR ADÉQUATE.

Made in La Guadeloupe (Qc), Canada
13/08/2021 (# test)

EMPIRE
SINCE 1932

Fabriqué à La Guadeloupe (Qc), Canada
13/08/2021 (# test)
27838

REFER TO INTERTEK'S DIRECTORY OF BUILDING PRODUCTS FOR DETAILED INFORMATION
SE RÉFÉRER AU RÉPERTOIRE DES PRODUITS HOMOLOGUÉS D'INTERTEK POUR PLUS D'INFORMATION

Intertek

STANDARDS / NORMES D'ESSAI:
Certified to / Certifié selon ULC S610
Certified to / Certifié selon UL 127
Certified to / Certifié selon CSA B415.1-10
Certified to/Certifié selon ASTM E2515-11

LISTED FACTORY BUILT FIREPLACE
FOYER PRÉFABRIQUÉ HOMOLOGUÉ

FOR USE WITH WOOD ONLY — POUR UTILISATION AVEC BOIS SEULEMENT

CONTACT LOCAL BUILDING OFFICIALS ABOUT THE RESTRICTIONS AND INSTALLATION INSPECTION IN YOUR AREA.
COMMUNIQUER AVEC LES AUTORITÉS LOCALES DU BÂTIMENT ET DE LA PRÉVENTION DES INCENDIES AU SUJET DES RESTRICTIONS D'INSTALLATION DANS VOTRE SECTEUR.

MODEL / MODÈLE: WFP100

Control number: 4002461
(February / Février 2017)

Serial Number / No. de Série: 1

INSTALL AND USE ONLY IN ACCORDANCE WITH SBI STOVE BUILDER INTERNATIONAL INSTALLATION AND OPERATION INSTRUCTIONS.
L'INSTALLATION ET L'OPERATION DOIT SE FAIRE SELON LES INSTRUCTIONS D'INSTALLATION ET D'UTILISATION DE SBI FABRICANT DE POÊLES INTERNATIONAL.

PREVENT HOUSE FIRES

- Use solid wood fuel only.
- For safety, keep doors tightly closed.
- Do not overfire unit.
- Replace with only ceramic glass 4mm thick.
- Use only with listed factory-built chimney as per manufacturer's instructions.
- A non-combustible hearth extension with R factor of 2 must be installed in front of unit extending 32 in (813 mm) in front and 8 in (203 mm) on each side of door opening. The fireplace must be raised of 12 inches to eliminate the R factor and have a non-combustible hearth extension of 16 inches in front of the unit.
- Do not use a fireplace insert or other products not specified for use with this product.
-
- WARNING: This fireplace has not been tested with an unvented gas log set. To reduce risk of fire or injury, do not install an unvented gas log set into fireplace.
- Areas of the fireplace incorporating warm or cold air ducts shall be enclosed in accordance with manufacturer's instructions.
- For more information, refer to owner's manual.
- This wood heater needs periodic inspection and repair for proper operation. Consult the owner's manual for further information.
- It is against US federal regulations to operate this wood heater in a manner inconsistent with the operating instructions in the owner's manual.

PRÉVENEZ LES INCENDIES

- Utiliser uniquement du bois de chauffage.
- Pour votre sécurité, maintenir les portes fermées de façon étanche.
- Ne pas surchauffer le foyer.
- Remplacer la vitre seulement avec un verre céramique de 4mm d'épaisseur.
- Pour utilisation seulement avec une cheminée préfabriquée homologuée tel que spécifié selon les instructions du manufacturier.
- Une protection de plancher incombustible avec un facteur R de 2 doit être installée à l'avant du foyer excédant de 32 po (813 mm) à l'avant et 8 po (203 mm) de chaque côté de l'ouverture de porte. Le foyer doit être surélevé de 12 pouces pour éliminer le facteur R et avoir une protection de plancher incombustible de 16 pouces à l'avant du foyer.
- Ne pas utiliser de foyer encastrable ou autres produits qui ne sont pas conçus précisément pour être utilisés avec le présent foyer.
-
- ATTENTION: Ce foyer n'a pas été mis à l'essai avec un ensemble de bûches décoratives à gaz non ventilé. Pour réduire les risques de feu ou de blessures, ne pas installer d'ensemble de bûches décoratives à gaz non ventilé dans ce foyer.
- Les zones du foyer intégrant des conduits d'air chaud ou froid doivent être installées en accord avec les instructions du manufacturier.
- Pour de plus amples renseignements, référez-vous au manuel d'instructions.
- Cet appareil requiert des inspections et réparations périodiques. Consulter le manuel de l'utilisateur pour plus d'information.
- Opérer cet appareil de chauffage de façon inconsistente par rapport au manuel de l'utilisateur consiste une violation de la loi fédérale (USA).

MINIMUM CLEARANCES TO COMBUSTIBLE MATERIALS / DÉGAGEMENTS MINIMUM AUX MATÉRIAUX COMBUSTIBLES

Sidewall / Mur latéral [1] :	**24 in (610 mm)**	**Side facing / Parement latéral** [2] :	**8 in (203 mm)**
Combustible shelf (from floor) / Tablette combustible (du sol) [2][3] :	**in (mm)**	**Ceiling (from floor) / Plafond (à partir du plancher)** [3] :	**84 in. (2134 mm)**

[1] From door opening. / À partir de l'ouverture de la porte.
[2] Subject to a maximum protrusion (consult owner's manual). / Sujet à une saillie maximale (consultez le manuel d'instructions).
[3] If the fireplace is elevated, the clearances to the combustible shelf and ceiling must be increased by an equivalent value. / Si le foyer est surélevé, les dégagements à la tablette combustible et au plafond doivent être augmentés d'une valeur équivalente.

Blower / Ventilateur: (115V, 0.8A, 60Hz)

PROCEDURE TO FOLLOW IN CASE OF RUN-AWAY FIRE	EN CAS D'INCENDIE DE CHEMINÉE
1) Keep doors closed 2) Close all combustion air controls	1) Maintenir les portes fermées 2) Fermer tous les dispositifs d'admission d'air

U.S. ENVIRONMENTAL PROTECTION AGENCY Certified to comply with 2020 particulate emission standards using cord wood.
AGENCE DE PROTECTION DE L'ENVIRONNEMENT DES É.U. (EPA). Conforme aux normes d'émission de particules de 2020 avec bûche de bois.

Tested and certified in compliance with CFR 40 part 60, subpart AAA, section 60.534(a)(1(ii))
Weighted average emission rate / Moyenne pondérée des émissions: 1.6 g/h

WARNING: This product can expose you to carbon monoxide, which is known to the State of California to cause cancer, birth defects or other reproductive harm.
(For more information go to www.p65warnings.ca.gov)



CAUTION

- HOT WHILE IN OPERATION.
- DO NOT TOUCH. KEEP CHILDREN, CLOTHING AND FURNITURE AWAY.
- CONTACT MAY CAUSE SKIN BURNS. SEE NAME-PLATE AND INSTRUCTIONS.
- THIS FIREPLACE NEEDS AIR FOR GOOD OPERATION.
- WHEN A FIRE IS BURNING IN THE FIREPLACE, FRESH AIR MUST BE SUPPLIED TO THE ROOM WHERE THE FIREPLACE IS LOCATED, FAILURE TO PROVIDE THIS MAY STARVE OTHER FUEL BURNING APPLIANCE FROM AN ADEQUATE AIR SUPPLY.

ATTENTION

- CHAUD EN FONCTIONNEMENT.
- NE PAS TOUCHER. GARDER LES ENFANTS, LES VÊTEMENTS ET LES MEUBLES ÉLOIGNÉS.
- UN CONTACT AVEC LA PEAU PEUT OCCASIONNER DES BRÛLURES. VOIR LES INSTRUCTIONS.
- CE FOYER A BESOIN D'AIR POUR SON BON FONCTIONNEMENT.
- LORSQUE LE FOYER BRÛLE, UN APPORT D'AIR SUPPLÉMENTAIRE DOIT ÊTRE PRÉVU DANS LA PIÈCE, UN MANQUE D'AIR D'APPOINT POURRAIT PRIVER LES AUTRES APPAREILS DE COMBUSTION D'UNE ALIMENTATION D'AIR ADÉQUATE.

Made in La Guadeloupe (Qc), Canada
13/08/2021 (# test)

hearthstone

Fabriqué à La Guadeloupe (Qc), Canada
13/08/2021 (# test)
27697

INSTALLATION AND OPERATION MANUAL

HE350 (VB00005 model)

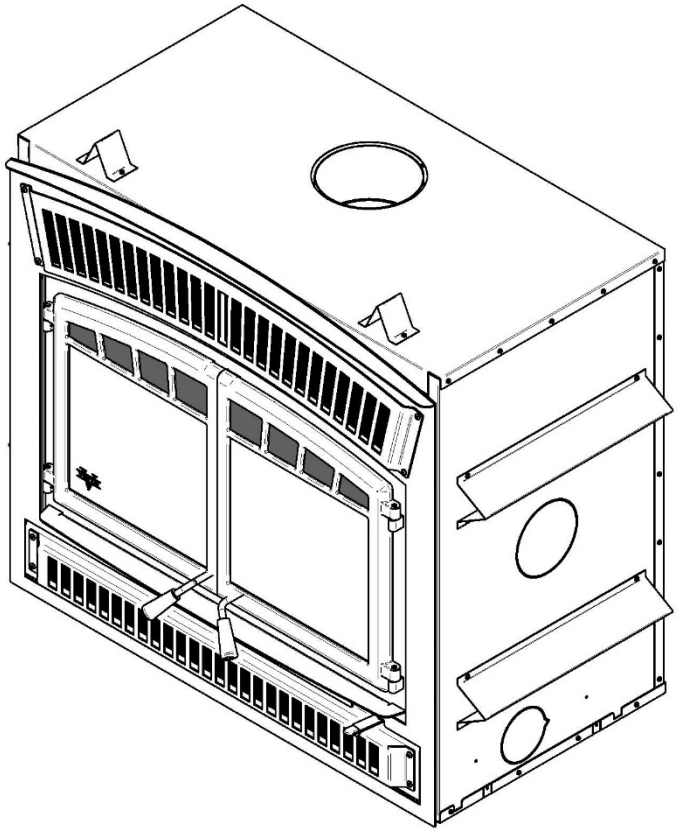

US ENVIRONMENTAL PROTECTION AGENCY
PHASE II CERTIFIED WOOD FIREPLACE

This appliances is EPA ≤ 4.5 g/h & Washington State Certified

Listed to standards ULC-S610 and UL 127

www.occanada.com

Manufactured by:
Stove Builder International Inc.
250 rue Copenhague, Saint-Augustin-de-Desmaures (Quebec), Canada, G3A 2H3
After-sale service: 418-908-8002 E-mail: tech@sbi-international.com

READ AND KEEP THIS MANUAL FOR REFERENCE

This manual is available for free download on the manufacturer's web site. It is a copyrighted document. Re-sale is strictly prohibited. The manufacturer may update this manual from time to time and cannot be responsible for problems, injuries, or damages arising out of the use of information contained in any manual obtained from unauthorized sources.

45856A
Printed in Canada
2021-08-18

THANK YOU FOR CHOOSING THIS VENTIS WOOD FIREPLACE

As one of North America's largest and most respected wood stove and fireplace manufacturers, Stove Builder International takes pride in the quality and performance of all its products. We want to help you get maximum satisfaction as you use this product.

In the pages that follow you will find general advice on wood heating, detailed instructions for safe and effective installation, and guidance on how to get the best performance from this fireplace as you build and maintain fires, and maintain your wood heating system.

We recommend that our wood burning hearth products be installed and serviced by professionals who are certified in the United States by NFI (National Fireplace Institute®) or in Canada by WETT (Wood Energy Technology Transfer) or in Quebec by APC (Association des Professionnels du Chauffage).

Congratulations on making a wise purchase.

If this fireplace is not properly installed, combustible materials near it may overheat. To reduce the risk of fire, follow the installation instructions in this manual exactly. Contact local building or fire officials about restrictions and installation inspection requirements in your area.

Please read this entire manual before you install and use your new fireplace. You may need to get a building permit for the installation of this fireplace and the chimney that it is connected to. Consult your municipal building department or fire department before installation. We recommend that you also inform your home insurance company to find out if the installation will affect your policy.

This heating unit is designed to serve as a supplementary heat source. We recommend that a primary heat source also be available in the home. The manufacturer cannot be responsible for costs associated with the use of another heating system.

CAUTION

- **THE INFORMATION GIVEN ON THE CERTIFICATION LABEL AFFIXED TO THE APPLIANCE ALWAYS OVERRIDES THE INFORMATION PUBLISHED, IN ANY OTHER MEDIA (OWNER'S MANUAL, CATALOGUES, FLYERS, MAGAZINES AND/OR WEB SITES).**
- **MIXING OF APPLIANCE COMPONENTS FROM DIFFERENT SOURCES OR MODIFYING COMPONENTS IS PROHIBITED AND WILL VOID THE WARRANTY. ANY MODIFICATION OF THE FIREPLACE THAT HAS NOT BEEN APPROVED IN WRITING BY THE TESTING AUTHORITY IS PROHIBITED AND VIOLATES CSA B365 (CANADA) AND NFPA 211 (USA).**
- **STOVE BUILDER INTERNATIONAL INC. (SBI) GRANTS NO WARRANTY, IMPLIED OR STATED, FOR THE POOR INSTALLATION OR LACK OF MAINTENANCE OF YOUR FIREPLACE AND ASSUMES NO RESPONSIBILITY OF ANY CONSEQUENTIAL DAMAGES.**

TABLE OF CONTENT

PART A - OPERATION AND MAINTENANCE 7

1. Safety Information 7

1.1 Summary of Operation and Maintenance Cautions and Warnings 7

2 General Information 9

2.1 Appliance performance[(1)] 9

2.2 General Features 10

2.3 Measurements 11

2.4 Zone Heating and How to Make it Work for You 13

2.5 The Benefits of Low Emissions and High Efficiency 13

2.6 The Olympia Chimney Commitment to You and the Environment 14

2.6.1 What is Your New Fireplace Made Of? 14

3 Fuel 15

3.1 How to Prepare or Buy Good Firewood 15

3.1.1 What is Good Firewood? 15

3.1.2 Tree Species 15

3.1.3 Log Length 16

3.1.4 Piece Size 16

3.1.5 How to Dry Firewood 17

3.1.6 Judging Firewood Moisture Content 18

3.2 Manufactured Logs 18

4 Operating Your Fireplace 19

4.1 Your First Fires 19

4.2 Lighting Fires 19

4.2.1 BEST PRACTICE: The Top Down Fire 19

4.2.2 Conventional Fire Starting 19

4.2.3 Two Parallel Logs 20

4.2.4 Using Fire Starters 20

4.3 Maintaining Wood Fires 20

4.3.1 General Advice 20

4.3.2 Ash Removal 21

4.3.3 Raking Charcoal 21

4.3.4 Firing Each New Load Hot 21

4.3.5 Shutting Down the Air Supply 22

4.3.6 Building Different Fires for Different Needs 24

4.3.7 EPA Certification Loading 24

4.3.8 Maximum Burn Cycle Times 25

4.3.9 How to place the logs 25

5 Maintaining Your Wood Heating System 26

5.1 Fireplace Maintenance 26

5.1.1 Plated Finish Maintenance 26

5.1.2 Glass Door Cleaning 26

5.1.3 Door Adjustment 27

5.1.4 Door Alignment 28

5.1.5 Replacing the Door Gaskets 29

5.1.6 Replacing the Door Glass 30

5.1.7 Cleaning and Painting the Fireplace 31

5.2 Chimney and Chimney Liner Maintenance 31

5.2.1 Why Chimney Cleaning is Necessary 31

5.2.2 How Often Should You Clean the Chimney? 32

5.2.3 Cleaning the Chimney 32

5.2.4 Fire Baffle Removal Prior to Cleaning the Chimney 33

5.2.5 Chimney Fire 33

PART B – INSTALLATION 34

6 Safety Information.....34

6.1 Summary of Installation Cautions and Warnings 34

6.2 Regulations Covering Fireplace Installation 35

6.3 Fireplace Installation 35

6.3.1 Standoff installation 35

6.3.2 Transportation Packaging 36

6.3.3 Locating the HE350 36

6.3.4 Clearances to combustible materials 36

6.3.5 Hearth extension construction options 37

6.3.6 Minimum Hearth Extension Requirements 44

6.3.7 Framing construction 45

6.3.8 Facing 48

6.3.9 Installation of a non-combustible shelf 49

7 The Venting System 50

7.1 General 50

7.2 Suitable Chimneys 50

7.3 Minimum Chimney Height 50

7.4 The Relationship Between the Chimney and the House 50

7.4.1 Why the chimney should penetrate the highest heated space 50

7.5 Chimney Installation Notes 51

7.6 Chimney Installation Instructions 54

7.6.1 Figures of Typical Chimney Installation 54
7.6.2 Exterior offset installation 55
7.6.3 Installation Instructions 55
7.6.4 Offset Chimney Installation 57
7.7 Angled Wall Radiation Shield 59
7.8 Chimney Support Installation 59
7.8.1 Universal Roof Support 59
7.8.2 Universal Offset Support 59
7.9 Supply of Combustion Air 60
APPENDIX 1 - HOT AIR CIRCULATION GRILLE – MODERN STYLE (AC01378) 61
APPENDIX 2 - FORCED AIR DISTRIBUTION KIT* (VA4460) 62
APPENDIX 3 - BLOWER MAINTENANCE OR REPLACEMENT 64
APPENDIX 4 - INSTALLING THE FRESH AIR INTAKE KIT 66
APPENDIX 5 - REFRACTORY SLABS REPLACEMENT 70
APPENDIX 6 - INSTALLATION OF SECONDARY AIR TUBES AND BAFFLE 71
APPENDIX 7 - AIR CONTROL SNAP DISC REPLACEMENT 73
APPENDIX 8 - ELECTRICAL WIRING 74
APPENDIX 9 - EXPLODED DIAGRAM AND PARTS LIST 76
VENTIS LIMITED LIFETIME WARRANTY 80

REGISTER YOUR WARRANTY ONLINE

To receive full warranty coverage, you will need to show evidence of the date you purchased your unit. Keep your sales invoice. We also recommend that you register your warranty online at
http://www.occanada.com/en/service-support/warranty-registration

Registering your warranty online will help us track rapidly the information we need on your unit.

PART A - OPERATION AND MAINTENANCE

1. SAFETY INFORMATION

1.1 Summary of Operation and Maintenance Cautions and Warnings

CAUTION - OPERATION

- **USING A FIREPLACE WITH CRACKED OR BROKEN COMPONENTS, SUCH AS GLASS OR FIREBRICKS OR BAFFLES MAY PRODUCE AN UNSAFE CONDITION AND MAY DAMAGE THE FIREPLACE.**
- **OPERATE ONLY WITH DOOR FULLY CLOSED. IF DOOR IS LEFT PARTLY OPEN, GAS AND FLAME MAY BE DRAWN OUT OF THE OPENING, CREATING RISKS FROM BOTH FIRE AND SMOKE.**
- **OPEN THE AIR CONTROL FULLY BEFORE OPENING THE LOADING DOOR.**
- **NEVER USE GASOLINE, LANTERN FUEL (NAPHTHA), FUEL OIL, MOTOR OIL, KEROSENE, CHARCOAL LIGHTER FLUID, OR SIMILAR LIQUIDS OR AEROSOLS TO START A FIRE IN THIS FIREPLACE. KEEP ALL SUCH LIQUIDS OR AEROSOLS WELL AWAY FROM THE FIREPLACE WHILE IT IS IN USE.**
- **HOT WHILE IN OPERATION, KEEP CHILDREN, CLOTHING AND FURNITURE AWAY. CONTACT MAY CAUSE SKIN BURNS. GLOVES MAY BE NEEDED FOR FIREPLACE OPERATION.**
- **DO NOT STORE FUEL WITHIN HEATER MINIMUM INSTALLATION CLEARANCES.**
- **BURN ONLY SEASONED NATURAL FIREWOOD.**
- **DO NOT BURN SCRAP OR GARBAGE, TREATED WOOD OR WOOD SUCH AS DRIFTWOOD FROM THE OCEAN WHICH HAS BEEN EXPOSED TO SALT OR OTHER CHEMICALS. SALT OR CHEMICALS CAN CORRODE THE FIREBOX AND CHIMNEY. DO NOT BURN LARGE AMOUNTS OF PAPER, CARDBOARD, TREE BRANCHES OR BUILDING CONSTRUCTION MATERIALS. INTENSE FIRING WITH THESE MATERIALS MAY OVERHEAT THE FIREPLACE, CAUSING DAMAGE TO THE UNIT, A HOME FIRE OR EVEN POSSIBLY IGNITING A CHIMNEY FIRE IF THE CHIMNEY IS CREOSOTED.**
- **THIS APPLIANCE SHOULD BE MAINTAINED AND OPERATED AT ALL TIMES IN ACCORDANCE WITH THESE INSTRUCTIONS.**
- **DO NOT ELEVATE THE FIRE BY MEANS OF GRATES, ANDIRONS OR OTHER MEANS.**
- **DO NOT OBSTRUCT AIR INTLETS. THIS FIREPLACE NEEDS AIR FOR ITS GOOD OPERATION.**
- **DO NOT BLOCK THE HOT AIR VENTS TO THE FIREPLACE AS THIS WILL CAUSE THE FIREPLACE TO OVERHEAT.**
- **A SMOKE DETECTOR, A CARBON MONOXIDE DETECTOR AND A FIRE EXTINGUISHER SHOULD BE INSTALLED IN THE HOUSE. THE LOCATION OF THE FIRE EXTINGUISHER SHOULD BE KNOWN BY ALL FAMILY MEMBERS.**
- **THIS WOOD HEATER NEEDS PERIODIC INSPECTION AND REPAIRS FOR THE PROPER OPERATION. IT IS AGAINST FEDERAL REGULATIONS TO OPERATE THIS WOOD HEATER IN A MANNER INCONSISTENT WITH OPERATING INSTRUCTIONS IN THIS GUIDE.**



WARNING: This product can expose you to chemicals including carbon monoxide, which is known to the State of California to cause cancer, birth defects or other reproductive harm. For more information go to www.P65warnings.ca.gov/

CAUTION - INSTALLATION

- **DO NOT INSTALL THE FIREPLACE OUTDOORS.**
- **THE FIREPLACE AND CHIMNEY MUST BE IN AN ENCLOSURE UP TO THE ATTIC.**
- **SOME JURISDICTIONS IN THE USA REQUIRE A SUPPLY OF OUTDOOR COMBUSTION AIR FOR THE FIREPLACE. IN CANADA, AN OUTDOOR AIR SUPPLY IS NOT REQUIRED, IF A CARBON MONOXIDE (CO) DETECTOR/ALARM IS LOCATED IN THE ROOM IN WHICH THE FIREPLACE IS INSTALLED. THE CO DETECTOR WILL PROVIDE WARNING IF FOR ANY REASON THE WOOD FIREPLACE FAILS TO FUNCTION CORRECTLY. IF YOU ARE REQUIRED TO INSTALL AN OUTDOOR AIR SUPPLY, WE RECOMMEND THAT YOU ALSO INSTALL A CO DETECTOR/ALARM TO PROVIDE WARNING IF SMOKE SPILLAGE FROM THE FIREPLACE OCCURS.**
- **KEEP COMBUSTIBLE MATERIALS AT LEAST 48 INCHES AWAY FROM THE FRONT OF THE FIREPLACE OPENING.**
- **DO NOT USE A FIREPLACE INSERT AND OTHER PRODUCTS NOT SPECIFIED FOR USE WITH THIS FIREPLACE.**
- **DO NOT INSTALL IN A MOBILE HOME (CANADA) OR MANUFACTURED HOME (USA).**

WARNING

- **DO NOT USE MATERIALS OTHER THAN THOSE LISTED IN THE REPLACEMENT PARTS SECTION DURING INSTALLATION AS THEY MAY BE SAFETY HAZARDS AND A FIRE COULD RESULT.**
- **THIS FIREPLACE HAS NOT BEEN TESTED WITH AN UNVENTED OR VENTED GAS LOG SET. TO REDUCE RISK OF FIRE OR INJURY, DO NOT INSTALL AN UNVENTED GAS LOG SET INTO THIS FIREPLACE.**

PLEASE NOTE THAT THE PICTURES SHOWN IN THIS MANUAL ARE GENERIC AND MAY NOT MATCH EXACTLY THE LOOK OF YOUR FIREPLACE.

2 GENERAL INFORMATION

2.1 Appliance performance(1)

Fuel type	Dry cordwood	
Recommended heating area[*]	1,000 to 2,800 ft^2 (93 to 260 m^2)	
Firebox volume	4,28 ft^3 (0,113 m^3)	
Maximum burn time[*]	11 h	
Overall heat output rate (min. to max.)(2)(3)	16,900 BTU/h to 43,000 BTU/h (5.0 kW to 12,6 kW)	
Average overall efficiency(3) - Dry cordwood	64.0% (HHV(4))	69.0% (LHV(5))
Optimum efficiency(2)(6)	70.0%	
Average particulate emissions rate(7)	1.6 g/h (EPA)	
Average CO(8)	159.0 g/h	

[*] Recommended heating area and maximum burn time may vary subject to location in home, chimney draft, heat loss factors, climate, fuel type and other variables. The recommended heated area for a given appliance is defined by the manufacturer as its capacity to maintain a minimum acceptable temperature in the designated area in case of a power failure.

(1) Values are as measured per test method, except for the recommended heating area, firebox volume, maximum burn time and maximum heat output.

(2) The maximum heat output (dry cordwood) is based on a loading density varying between 15 lb/ft^3 and 20 lb/ft^3. Other performances are based on a fuel load prescribed by the standard. The specified loading density varies between 7 lb/ft^3 and 12 lb/ft^3. The moisture content is between 19% and 25%.

(3) As measured per CSA B415.1-10 stack loss method.

(4) Higher Heating Value of the fuel.

(5) Lower Heating Value of the fuel.

(6) Optimum overall efficiency at a specific burn rate (LHV).

(7) This appliance is officially tested and certified by an independent agency.

(8) Carbon monoxide.

2.2 General Features

Maximum log length[1]	25 in (635 mm) east-west*
Flue outlet diameter	8 in (203 mm)
Chimney diameter	8 in (203 mm)
Type of chimney	CAN/ULC S629, UL 103 HT (2100 °F)
Baffle material	C-Cast
Approved for alcove installation	Not approved
Approved for mobile home installation‡	Not approved
Type of door	Double, glass with cast iron frame
Type of glass	Ceramic glass
Blower	Included (up to 176 CFM)
Particulate emission standard	EPA / ASTM WK47329
USA standard (safety)	UL 127
Canadian standard (safety)	ULC S610

*East-west: through the door you see the longitudinal sides of the logs; north-south: through the door you see the tips of the logs.

‡ Mobile home (Canada) or manufactured home (USA): The US department of Housing and Urban Development describes “manufactured homes” better known as “mobile homes” as followed; buildings built on fixed wheels and those transported on temporary wheels/axles and set on a permanent foundation. In Canada, a mobile home is a dwelling for which the manufacture and assembly of each component is completed or substantially completed prior to being moved to a site for installation on a foundation and connection to service facilities and which conforms to the CAN/CSA-Z240 MH standard.

[1] The recommended log length is 16 inches, placed in the north-south orientation. For more details see section 3 – Fuel.

2.3 Measurements

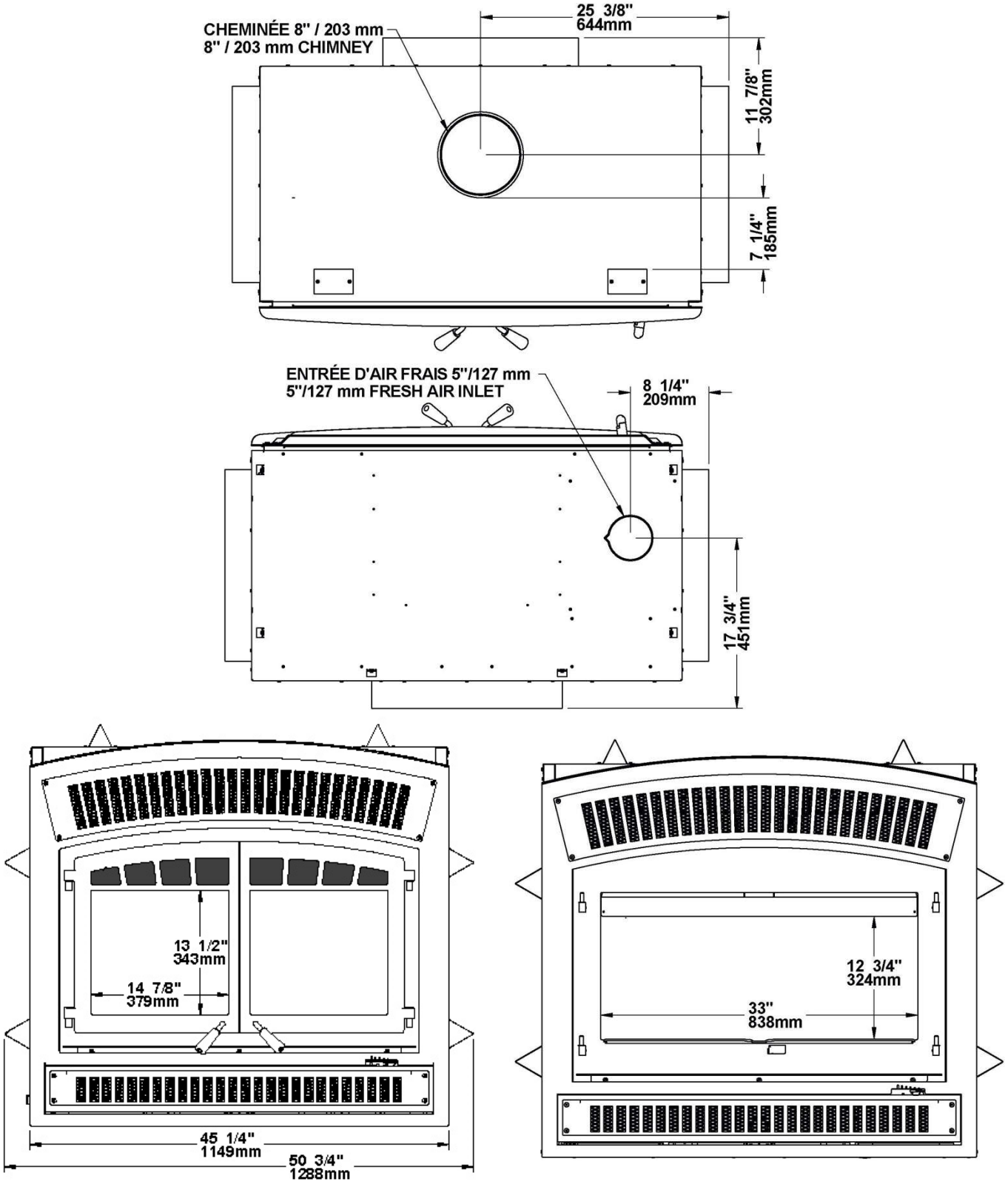

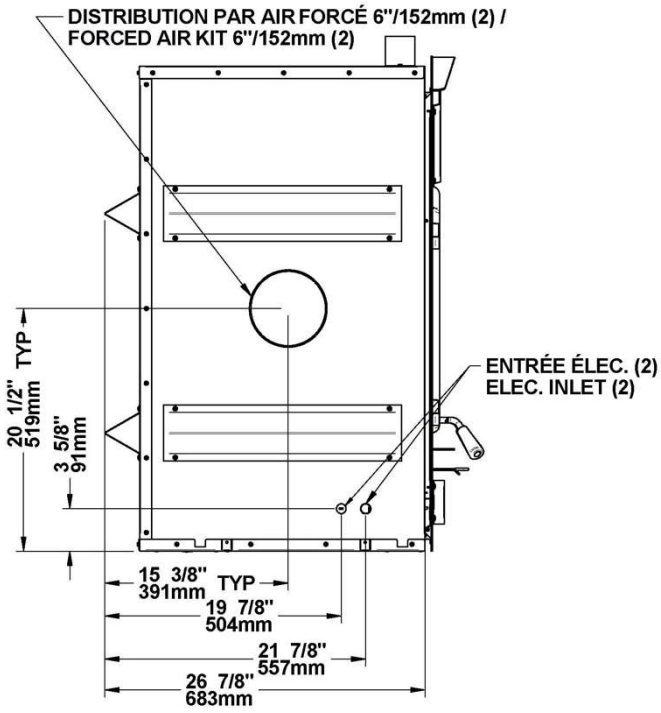
DISTRIBUTION PAR AIR FORCÉ 6"/152mm (2) /
FORCED AIR KIT 6"/152mm (2)
ENTRÉE ÉLEC. (2)
ELEC. INLET (2)
20 1/2" TYP
519mm
3 5/8"
91mm
15 3/8" TYP
391mm
19 7/8"
504mm
21 7/8"
557mm
26 7/8"
683mm

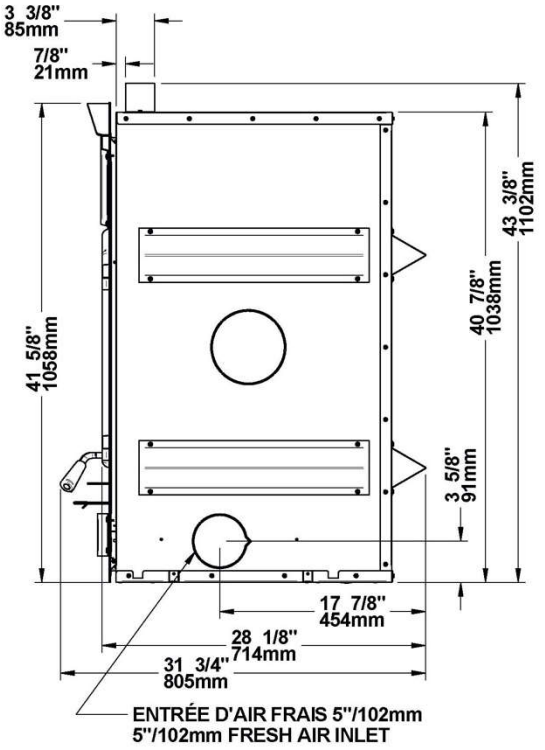
3 3/8"
85mm
7/8"
21mm
43 3/8"
1102mm
40 7/8"
1038mm
41 5/8"
1058mm
3 5/8"
91mm
17 7/8"
454mm
28 1/8"
714mm
31 3/4"
805mm
ENTRÉE D'AIR FRAIS 5"/102mm
5"/102mm FRESH AIR INLET

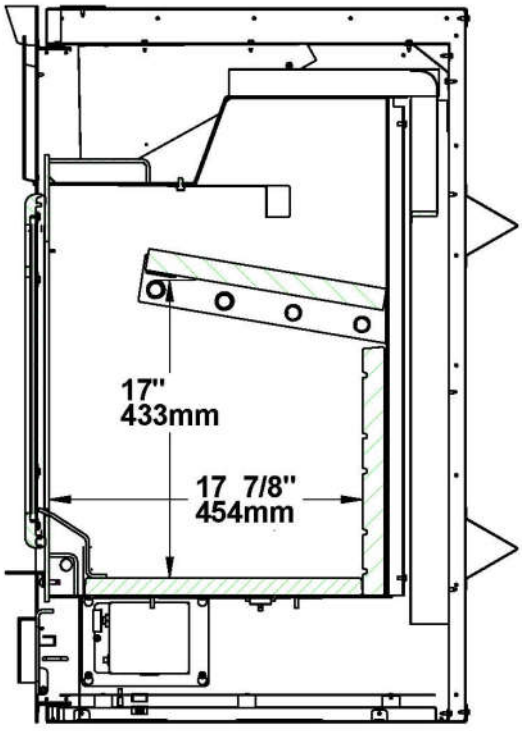
17"
433mm
17 7/8"
454mm

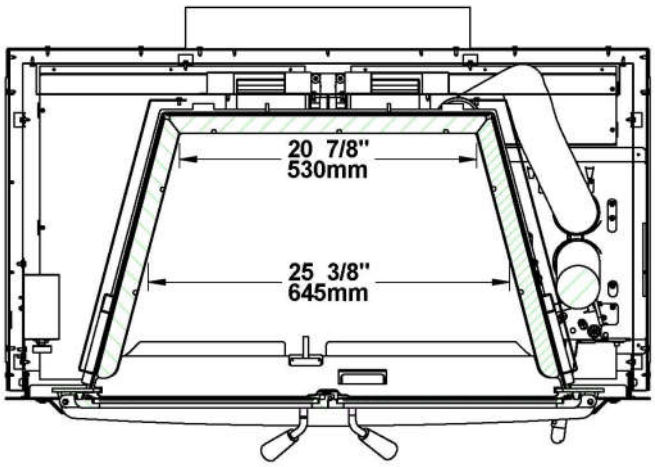
20 7/8"
530mm
25 3/8"
645mm

2.4 Zone Heating and How to Make it Work for You

Your new HE350 wood fireplace is a space heater, which means it is intended to heat the area it is installed in, as well as spaces that connect to that area, although to a lower temperature. This is called zone heating and it is an increasingly popular way to heat homes or spaces within homes.

Zone heating can be used to supplement another heating system by heating a particular space within a home, such as a basement family room or an addition that lacks another heat source.

Houses of moderate size and relatively new construction can be heated with a properly sized and located wood fireplace. Whole house zone heating works best when the fireplace is located in the part of the house where the family spends most of its time. This is normally the main living area where the kitchen, dining and living rooms are located. By locating the fireplace in this area, you will get the maximum benefit of the heat it produces and will achieve the highest possible heating efficiency and comfort. The space where you spend most of your time will be warmest, while bedrooms and basement (if there is one) will stay cooler. In this way, you will burn less wood than with other forms of heating.

Although the fireplace may be able to heat the main living areas of your house to an adequate temperature, we strongly recommend that you also have a conventional oil, gas or electric heating system to provide backup heating.

Your success with zone heating will depend on several factors, including the correct sizing and location of the fireplace, the size, layout and age of your home and your climate zone. Three-season vacation homes can usually be heated with smaller fireplaces than houses that are heated all winter.

2.5 The Benefits of Low Emissions and High Efficiency

The low smoke emissions produced by the special features inside the HE350 firebox mean that your household will release up to 90 percent less smoke into the outside environment than if you used an older conventional stove. But there is more to the emission control technologies than protecting the environment.

The smoke released from wood when it is heated contains about half of the energy content of the fuel. By burning the wood completely, your fireplace releases all the heat energy from the wood instead of wasting it as smoke up the chimney. Also, the features inside the firebox allow you to reduce the air supply to control heat output, while maintaining clean and efficient flaming combustion, which boosts the efficient delivery of heat to your home.

The emission control and advanced combustion features of your fireplace can only work properly if your fuel is in the correct moisture content range of 15% to 20%. See ***Section 3 Fuel of this manual*** **for suggestions on preparing fuel wood and judging its moisture.**

2.6 The Olympia Chimney Commitment to You and the Environment

The Olympia Chimney team is committed to protecting the environment, so we do everything we can to use only materials in our products that will have no lasting negative impact on the environment.

2.6.1 What is Your New Fireplace Made Of?

The body of your fireplace, which is most of its weight, is carbon steel. Should it ever become necessary many years in the future, almost the entire fireplace can be recycled into new products, thus eliminating the need to mine new materials.

The paint coating on your fireplace is very thin. Its VOC content (Volatile Organic Compounds) is very low. VOCs can be responsible for smog, so all the paint used during the manufacturing process meets the latest air quality requirements regarding VOC reduction or elimination.

The air tubes are stainless steel, which can also be recycled.

The C-Cast baffle is made of an aluminosilicate fibre material that is compressed with a binder to form a rigid board. C-Cast can withstand temperatures above 2,000 °F. It is not considered hazardous waste. Disposal at a landfill is recommended.

Moulded refractory bricks are mainly composed of silicon dioxide, also known as silica, a product processed from a mined mineral. It is most commonly found in nature in the form of sand and clay. Disposal at a landfill is recommended. The steel mesh contained in some refractory bricks can be recycled.

The door and glass gaskets are fibreglass which is spun from melted sand. Black gaskets have been dipped into a solvent-free solution. Disposal at a landfill is recommended.

The door glass is a 4 mm thick ceramic material that contains no toxic chemicals. It is made of natural raw materials such as sand and quartz that are combined in such a way to form a high temperature glass. Ceramic glass cannot be recycled in the same way as normal glass, so it should not be disposed of with your regular household products. Disposal at a landfill is recommended.

3 FUEL

CAUTION

- **DO NOT BURN SCRAP OR GARBAGE, TREATED WOOD OR WOOD SUCH AS DRIFTWOOD FROM THE OCEAN WHICH HAS BEEN EXPOSED TO SALT OR OTHER CHEMICALS. SALT OR CHEMICALS CAN CORRODE THE FIREBOX AND CHIMNEY. DO NOT BURN LARGE AMOUNTS OF PAPER, CARDBOARD, TREE BRANCHES OR BUILDING CONSTRUCTION MATERIALS. INTENSE FIRING WITH THESE MATERIALS MAY OVERHEAT THE FIREPLACE, CAUSING DAMAGE TO THE UNIT, A HOME FIRE OR EVEN POSSIBLY IGNITING A CHIMNEY FIRE IF THE CHIMNEY IS CREOSOTED.**
- **DO NOT OVER FIRE THIS HEATER OVER FIRING CAN RESULT IN A SAFETY HAZARD AND CAN PERMANENTLY DAMAGE THE FIREPLACE AND CHIMNEY.**

3.1 How to Prepare or Buy Good Firewood

3.1.1 What is Good Firewood?

Good firewood has been cut to the correct length for the fireplace, split to a range of sizes and stacked in the open until its moisture content is reduced to 15% to 20%.

3.1.2 Tree Species

The tree species the firewood is produced from is less important than its moisture content. The main difference in firewood from various tree species is the density of the wood. Hardwoods are denser than softwoods. People who live in the coldest regions of North America usually have only spruce, birch and poplar, other low-density species to burn and yet they can heat their homes successfully.

Homeowners with access to both hardwood and softwood fuel sometimes use both types for different purposes. For example, softer woods make good fuel for relatively mild weather in spring and fall because they light quickly and produce less heat Softwoods are not as dense as hardwoods so a given volume of wood contains less energy. Using softwoods avoids overheating the house, which can be a common problem with wood heating in moderate weather. Harder woods are best for colder winter weather when more heat and longer burn cycles are desirable.

Note that hardwood trees like oak, maple, ash and beech are slower growing and longer lived than softer woods like poplar and birch. That makes hardwood trees more valuable. The advice that only hardwoods are good to burn is outdated. Old, leaky cast iron stoves wouldn’t hold a fire overnight unless they were fed large pieces of hardwood. That is no longer true. You can successfully heat your home by using the less desirable tree species and give the forest a break at the same time.

3.1.3 Log Length

Logs should be cut at least 1" (25 mm) shorter than the firebox so they fit in easily. Pieces that are even slightly too long make loading the fireplace very difficult. The log length recommended for your fireplace is 16" (406mm).

The pieces should be a consistent length, with a maximum of 1" (25 mm) variation from piece to piece.

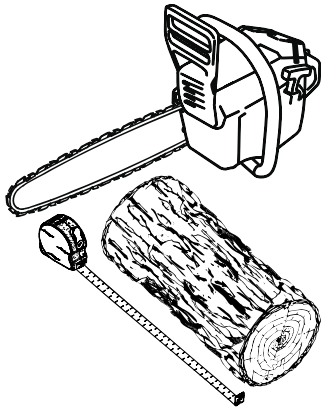

3.1.4 Piece Size

Firewood dries more quickly when it is split. Large unsplit rounds can take years to dry enough to burn. Even when dried, unsplit logs are difficult to ignite because they don't have the sharp edges where the flames first catch. Logs as small as 3" (75 mm) should be split to encourage drying.

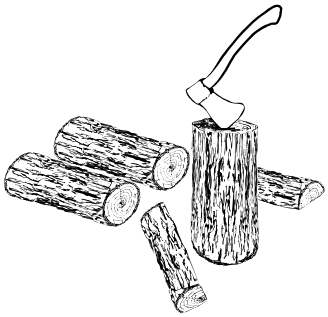

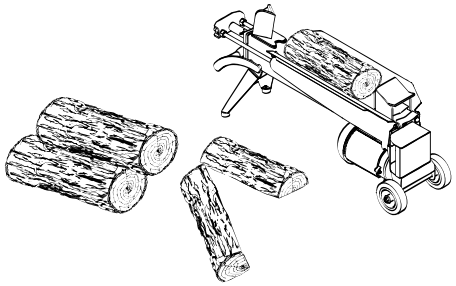

Wood should be split to a range of sizes, from about 3" to 6" (75 mm to 150 mm) in cross section. Having a range of sizes makes starting and rekindling fires much easier. Often, the firewood purchased from commercial suppliers is not split finely enough for convenient stoking. It is sometimes advisable to resplit the wood before stacking to dry.

3.1.5 How to Dry Firewood

Firewood that is not dry enough to burn is the cause of most complaints about wood fireplaces. Continually burning green or unseasoned wood produces more creosote and involves lack of heat and dirty glass door. See **Section 5 Maintaining Your Wood Heating System** for concerns about creosote.

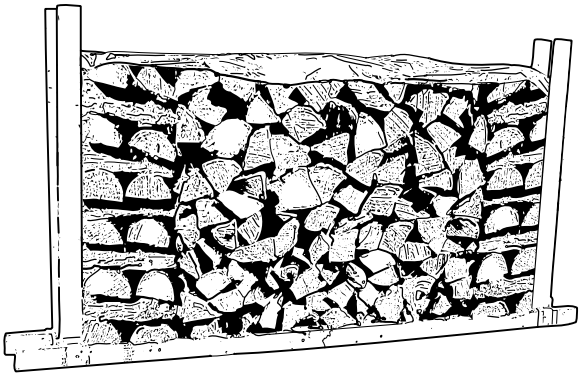

Here are some things to consider in estimating drying time:

- Firewood takes a long time to dry.
- Small pieces dry more quickly than large pieces.
- Split pieces dry more quickly than unsplit rounds.
- Softwoods take less time to dry than hardwoods.
- Softwoods like pine, spruce, and poplar/aspen can be dry enough to burn after being stacked in the open for only the summer months.
- Hardwoods like oak, maple and ash can take one, or even two years to dry fully, especially if the pieces are big.
- Firewood that is ready to burn has a moisture content between15% and 20% by weight and will allow your fireplace to produce its highest possible efficiency.
- Firewood bought from a dealer is rarely dry enough to burn, so it is advisable to buy the wood in spring and dry it yourself.
- Drying happens faster in dry weather than in damp, maritime climates.
- Drying happens faster in warm summer weather than in winter weather.
- Firewood dries more quickly when stacked in the open where it is exposed to sun and wind; it takes much longer to dry when stacked in a wood shed.

3.1.6 Judging Firewood Moisture Content

You can find out if some firewood is dry enough to burn by using these guidelines:

- Cracks form at the ends of logs as they dry;
- As it dries in the sun, the wood turns from white or cream colored to grey or yellow;
- Bang two pieces of wood together; seasoned wood sounds hollow and wet wood sounds dull;
- Dry wood is much lighter in weight than wet wood;
- Split a piece, and if the fresh face feels warm and dry it is dry enough to burn; if it feels damp, it is too wet;
- Burn a piece; wet wood hisses and sizzles in the fire and dry wood does not.

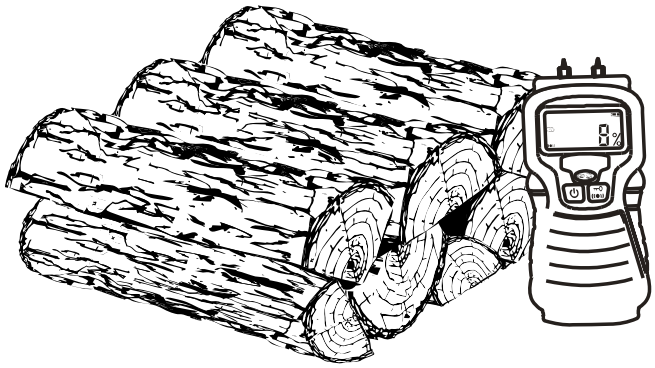

You could buy a wood moisture meter to test your firewood.

3.2 Manufactured Logs

Manufactured logs made of 100% wood residues can be burn in your fireplace. However, they must be used carefully. Therefore, you cannot place a large quantity of such logs into your fireplace. Manufactured logs typically release a much larger heat output over a short period of time. Start with one log and see how the fireplace reacts. You can increase the number of logs burned at a time to a maximum of three. Burning more than three manufactured logs at one time can overheat and damage your stove.

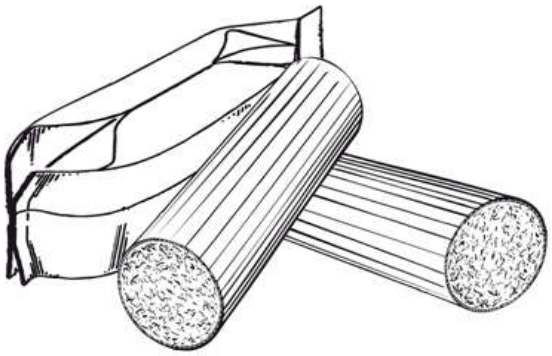

CAUTION

- **DO NOT BURN ANY MANUFACTURED LOGS CONTAINING CHEMICAL ADDITIVES. YOU MAY OVERHEAT YOUR FIREPLACE, THEREFORE CAUSING A FIRE HAZARD AND VOIDING YOUR WARRANTY.**
- **DO NOT POKE OR STIR THE LOGS WHILE THEY ARE BURNING.**
- **USE ONLY FIRELOGS THAT HAVE BEEN TESTED FOR USE IN FIREPLACES (SEE ULC/ORD-C127, COMPOSITE FIRELOGS) AND PRIOR TO USE, REFER TO FIRELOG WARNINGS AND CAUTIONS MARKINGS ON PACKAGING.**

4 OPERATING YOUR FIREPLACE

This wood heater has a manufacturer-set minimum low burn rate that must not be altered. It is against federal regulations to alter this setting or otherwise operate this wood heater in a manner inconsistent with operating instructions in this manual.

4.1 Your First Fires

Two things will happen as you burn your first few fires: the paint cures and the internal components of the fireplace are conditioned.

As the paint cures, some of the chemicals vaporize. The vapors are not poisonous, but they do smell bad. Fresh paint fumes can also cause false alarms in smoke detectors. So, when you first light your fireplace, be prepared by opening doors and/or windows to ventilate the house. As you burn hotter and hotter fires, more of the painted surfaces reach the curing temperature of the paint. The smell of curing paint does not disappear until you have burned one or two very hot fires.

Burn one or two small fires to begin the curing and conditioning process. Then build bigger and hotter fires until there is no longer any paint smell from the fireplace. Once the paint smell disappears, your fireplace is ready for serious heating.

4.2 Lighting Fires

Each person who heats with wood develops their own favorite way to light fires. Whatever method you choose, your goal should be to get a hot fire burning quickly. A fire that starts fast produces less smoke and deposits less creosote in the chimney. Here are three popular and effective ways to start wood fires.

4.2.1 BEST PRACTICE: The Top Down Fire

The top down fire starting method solves two problems with the conventional method: first, it does not collapse and smother itself as it burns; and second, it's cleaner. The top down method only works properly if the wood is well-seasoned.

Start by crisscrossing around 10 finely split and dry kindling (0.5 to 1 in) leaving air space between the pieces. Then put at least 5 news paper sheets to the top of the pieces. The best way to have your ignition clean and environmentally friendly is to roll the news papers to make a long cylinder, then to make 2 knots with it. The goal is to have the news papers as compact as possible to make it burn slowly. After the ignition of the news paper, let the door open of 1 in for 5-10 minutes. The air control should be open.

When you have a small coal bed, it's the time to crisscross three or four medium-sized split pieces (2-3 in) of dry firewood in the firebox. You can close the door as soon as you loaded the pieces. Let burn until you have a good coal bed. You are now ready for the main load.

4.2.2 Conventional Fire Starting

The conventional way to build a wood fire is to bunch up 5 to 10 sheets of plain newspaper and place them in the firebox. Next, place 10 or so pieces of fine kindling on the newspaper. This kindling should be very thin; less than 1" (25 mm). Next, place some larger kindling pieces on the fine kindling. Open the air control fully and light the newspaper. If you have a tall, straight venting system you should be able to close the door immediately and the fire will ignite. Once the fire has ignited, close the door and leave the air control fully open.

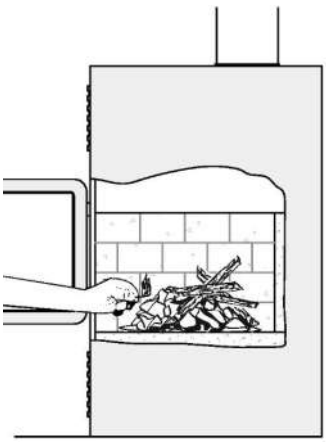

A conventional kindling fire with paper under finely split wood.

DO NOT LEAVE THE FIREPLACE UNATTENDED WHEN THE DOOR IS SLIGHTLY OPENED. ALWAYS CLOSE AND LATCH THE DOOR AFTER THE FIRE IGNITES.

After the kindling fire has mostly burned, you can add standard firewood pieces until you have a fire of the right size for the conditions.

CAUTION: PLACE THE WOOD LOGS FAR ENOUGH FROM THE GLASS TO ALLOW PROPER PRIMARY AIR FLOW.

4.2.3 Two Parallel Logs

Place two split logs in the firebox. Place a few sheets of twisted newspaper between the logs. Now place some fine kindling across the two logs and some larger kindling across those, log cabin style. Light the newspaper.

4.2.4 Using Fire Starters

Many people like to use commercial fire starters instead of newspaper. Some of these starters are made of sawdust and wax and others are specialized flammable solid chemicals. Follow the package directions for use.

Gel starter may be used but only if there are no hot embers present. Use only in a cold firebox to start a fire.

DO NOT USE FLAMMABLE LIQUIDS SUCH AS GASOLINE, NAPHTHA, FUEL OIL, MOTOR OIL, OR AEROSOLS TO START OR REKINDLE THE FIRE.

4.3 Maintaining Wood Fires

4.3.1 General Advice

Wood heating with a space heater is very different than other forms of heating. There will be variations in the temperature in different parts of the house and there will be variations in temperature throughout the day and night. This is normal, and for experienced wood burners these are advantages of zone heating with wood.

Do not expect steady heat output from your fireplace. It is normal for its surface temperature to rise after a new load of wood is ignited and for its temperature to gradually decline as the fire progresses. This rising and falling of temperature can be matched to your household routines. For example, the area temperature can be cooler when you are active, such as when doing housework or cooking, and it can be warmer when you are inactive, such as when reading or watching television.

IMPORTANT: Wood burns best in cycles. A cycle starts when a new load of wood is ignited by hot coals and ends when that load has been consumed down to a bed of charcoal about the same size as it was when the wood was loaded. Do not attempt to produce a steady heat output by placing a single log on the fire at regular intervals. Always place at least 5 to 8 pieces on the fire at a time in the North-South orientation so that the heat radiated from one piece helps to ignite the pieces next to it. Each load of wood should provide several hours of heating. The size of each load can be matched to the amount of heat needed.

When you burn in cycles, you rarely need to open the fireplace's loading door while the wood is flaming. This is an advantage because there is more chance that smoke will leak from the fireplace when the door is opened as a full fire is burning.

IF YOU MUST OPEN THE DOOR WHILE THE FUEL IS FLAMING, OPEN THE AIR CONTROL FULLY FOR A FEW MINUTES, THEN UNLATCH AND OPEN THE DOOR SLOWLY.

4.3.2 Ash Removal

Ash should be removed from the firebox every two or three days of full time heating. Do not let the ash build up in the firebox because it will interfere with proper fire management.

The best time to remove ash is after an overnight fire when the fireplace is relatively cool, but there is still some chimney draft to draw the ash dust into the fireplace and prevent it from coming into the room.

After ashes have been removed from the fireplace and placed in a tightly covered metal container, they should be taken outside immediately. The closed container of ashes should be placed on a non-combustible floor or on the ground well away from all combustible materials pending final disposal. Ashes normally contain some live charcoal that can stay hot for several days. If the ashes are disposed of by burial in soil or otherwise locally dispersed, they should be retained in the closed container until all cinders have thoroughly cooled. Other waste should not be placed in this container.

NEVER STORE ASHES INDOORS OR IN A NON-METALIC CONTAINER OR ON A WOODEN DECK.

4.3.3 Raking Charcoal

Rekindle the fire when you notice that the room temperature has fallen. You will find most of the remaining charcoal at the back of the firebox, furthest from the door. Rake these coals towards the door before loading. There are two reasons for this raking of the coals. First, it concentrates them near where most of the combustion air enters the firebox and where they can ignite the new load quickly, and second, the charcoal will not be smothered by the new load of wood. If you were to simply spread the charcoal out, the new load will smoulder for a long time before igniting.

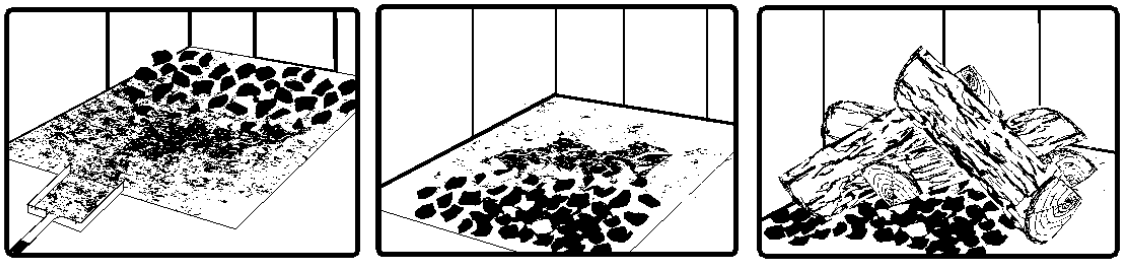

Remove ash first, and then rake charcoal towards the front of the firebox before loading so that it will ignite the new load.

4.3.4 Firing Each New Load Hot

Place the new load of wood on and behind the charcoal, and not too close to the glass. Close the door and open the air control fully. Leave the air control fully open until the firebox is full of flames, the wood has charred to black and its edges are glowing red. Firing each load of wood hot accomplishes a few things:

- Drives the surface moisture from the wood,
- Creates a layer of char on the wood, which slows down its release of smoke,
- Heats the firebox components so they reflect heat back to the fire, and
- Heats the chimney so it can produce strong, steady draft for the rest of the cycle.

DO NOT LEAVE THE FIREPLACE UNATTENDED WHILE A NEW LOAD IS BEING FIRED HOT.
DO NOT OVERFIRE.

When you burn a new load of wood hot, the result will be a surge of heat from the fireplace. This heat surge is welcome when the room temperature is a little lower than desirable, but not welcome if the space is already warm. Therefore, allow each load of wood to burn down so that the space begins to cool off a little before loading. Letting the space cool before loading is one of the secrets to clean burning and effective zone heating.

4.3.5 Shutting Down the Air Supply

The fireplace can operate at three different settings: Maximum combustion rate, medium combustion rate and finally low combustion rate. At the low combustion rate setting, the fireplace is operated with an air control system that regulates the combustion.

The maximum combustion rate setting is usually for cold startup and when maximum heat is desired **(Position A).** At the maximum combustion rate setting, the air control system is not operating.

NOTE

THE AIR CONTROL SYSTEM IS ACTIVATED ONLY WHEN THE AIR INTAKE IS COMPLETLY CLOSED (POSITION B) AND WHEN THE FIREPLACE IS HOT ENOUGH.

When you close the air intake, you gradually reduce the combustion. Visually you will be able to notice a considerable reduction of combustion. Under these conditions, you will be at the medium combustion rate. Using the secondary air intake lever you can adjust your combustion system to eventually reach the minimum combustion rate.

If the flames diminish to the point of disappearing when you reduce the air supply, your wood can be too humid. If you have seasoned wood and use the air intake control properly, the flames should decrease, but remain strong and stable, even when operating at low combustion rate.

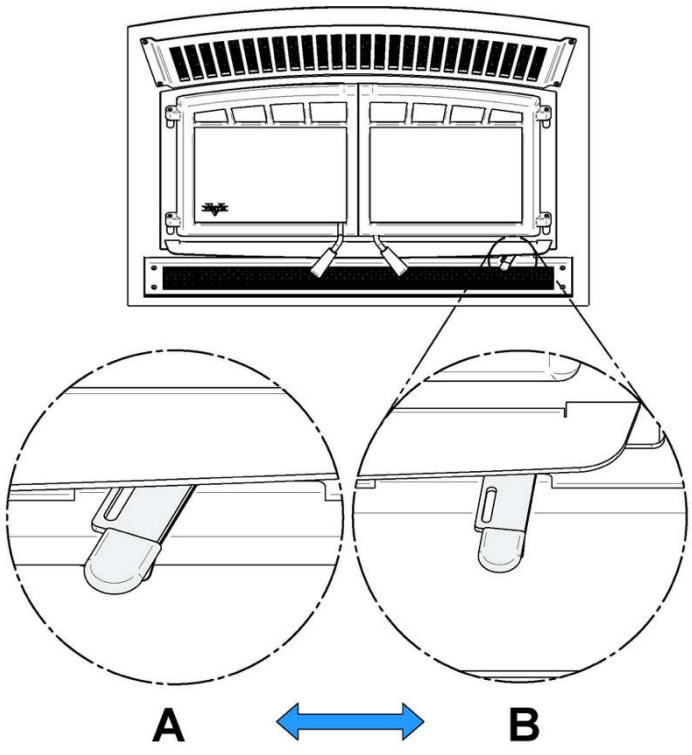

Position A: In this position, air supply is fully open. You should be using this position for:

- Cold start;
- Maximum burn rate;

Position B: Air control intake is reduced**.** The air control system is activated.

Position B1: Low combustion rate.
Position B2: Medium combustion rate

<u>Example of operating sequence:</u>

A: Cold start or Maximum burn rate

B: Mid-High until the factory setting temperature is reached.

B-2 or B-1: Mid-Low or Low once the factory setting is reached.

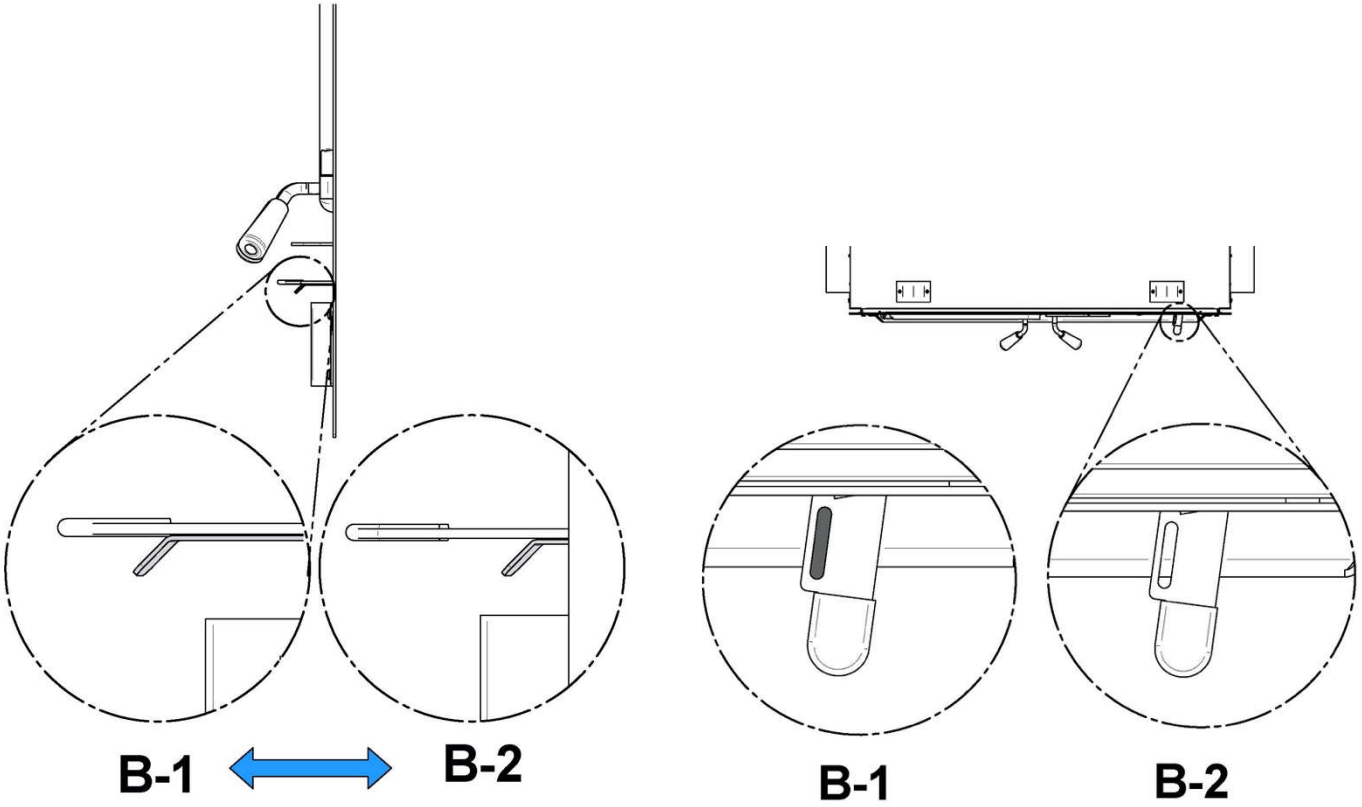

In the B position, it is also possible to close the air supply manually if a power failure occurs by pushing the small lever to the left.

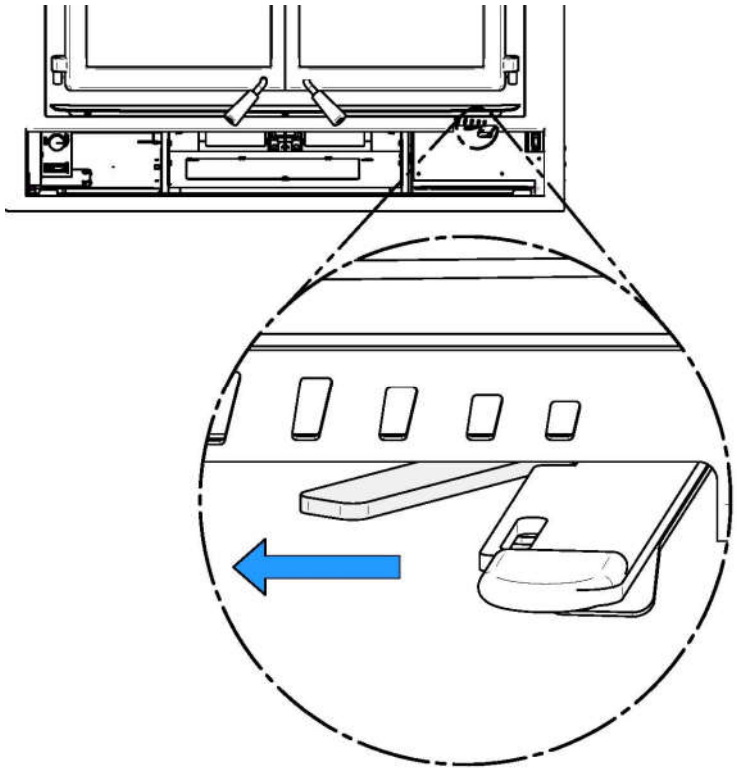

4.3.6 Building Different Fires for Different Needs

Using the air control is not the only way to match the fireplace's heat output to the heat demand. Your house will need far less heat in October than in January to be kept at a comfortable temperature. If you fill the firebox full in fall weather, you will either overheat the space or turn the fireplace down so much that the fire will be smoky and inefficient.

4.3.7 EPA Certification Loading

The charging methods presented below are those that were used during emissions certification.

For EPA Certification testing, wood logs were 16 ± 1 inches long and the specie used was beech.

4.3.7.1 High burn rate

Open the air control completely (see Section 4.3.5, position A). Place two medium kindling pieces (2"x2") of wood on the brick of the firebox in a north-south orientation. Then, put two other medium kindling pieces (2"x2") of wood above the first one with an east-west orientation. Then, put two more rows of smaller wood (1"x1") on top of the first two rows. The first row, put four pieces with a north-south orientation and the second one, put two more pieces with the east-west direction. Leave a little space between each piece. Tie knot with four sheets of paper and place them on top of the kindling wood. Light up the paper and let the door ajar at 90° until all the wood is on fire. Close the door.

When there is no more fire in the front of the firebox and there are only faint flames on the wood in the back of the firebox, break ashes, level the coal bed and put four start-up fuel pieces (3"x2"). Put the first two bigger pieces with a north-south orientation and a second row of two pieces with an east-west orientation. Spaced them of around 6 inches. Let the door ajar until all the wood is on fire. Close the door.

Once again, when there is no more fire in the front of the firebox and there are only faint flames on the wood in the back of the firebox, break ashes and level the coal bed. Then place two rows of three pieces of wood (4"x4") in the middle of the fire chamber in a North-South orientation. They should touch the rear bricks and be 1 ½ inch apart from each other. Close the door immediately and leave the primary air control completely open.

4.3.7.2 Medium and low burn rate

On a 2" coal bed that is still slightly red, place two rows of three pieces of wood (5"x4") on the left side of the fire chamber with a north-south orientation then place one more piece of wood (5"x4") on the right side of the two rows. There should be all at least 1 inch of air between each column. Let the door ajar for 5 minutes and then close the door with the primary air control fully open. Wait for approximately 2 more minutes before closing manually the primary air control completely. For the medium burn rate, push the auxiliary air control toward the fireplace (see Section 4.3.5, position B-2). For the low burn rate, pull the auxiliary air control out (see Section 4.3.5, position B-1).

4.3.8 Maximum Burn Cycle Times

The burn cycle time is the period between loading wood on a coal bed and the consumption of that wood back to a coal bed of the same size. The flaming phase of the fire lasts for roughly the first half of the burn cycle and the second half is the coal bed phase during which there is little or no flame. The length of burn you can expect from your fireplace, including both the flaming and coal bed phases, will be affected by a number of things, such as:

- Firebox size,
- The amount of wood loaded,
- The species of wood you burn,
- The wood moisture content,
- The size of the space to be heated,
- The climate zone you live in, and
- The time of year.

The table below provides a very general indication of the maximum burn cycle times you are likely to experience, based on firebox volume.

FIREBOX VOLUME	MAXIMUM BURN TIME
<1.5 cubic feet	3 to 5 hours
1.5 c.f. to 2.0 c.f	5 to 6 hours
2.0 c.f. to 2.5 c.f.	6 to 8 hours
2.5 c.f. to 3.0 c.f.	8 to 9 hours
>3.0 c.f.	9 to 10 hours

Long burn times are not necessarily an indication of efficient fireplace operation. When you are home during the day and able to tend the fire, it is preferable to build a smaller fire that might provide three or four hours of heating than to fully load the firebox for a much longer burn. Shorter burn cycles make it easier to match the heat output of the fireplace to the heat demand of the space.

4.3.9 How to place the logs

In fireboxes that are roughly square, wood can be loaded so that looking through the glass door you see the ends of the logs (north-south) or the sides of the logs (east-west). This fireplace is designed to burn efficiently in the **north-south** orientation.

East-west loads that are built compactly break down slowly when heated, but the amount of wood you can load is limited because if you put in too many pieces, one may fall against the glass. East-west loads are excellent for long, low output fires for relatively mild weather.

North-south loads break down more quickly, but much more wood can be loaded at a time. This makes north-south loading good for high output, long lasting fires for cold weather.

5 MAINTAINING YOUR WOOD HEATING SYSTEM

5.1 Fireplace Maintenance

Your new fireplace will give many years of reliable service if you use and maintain it correctly. Some of the internal components of the firebox, such as refractory slabs, baffles and air tubes, will wear over time under intense heat. You should always replace defective parts with original parts.

Firing each load hot to begin a cycle as described above will not cause premature deterioration of the fireplace. However, letting the fireplace run with the air control fully open for the entire burn cycles can cause damage over time. The hotter you run the fireplace throughout burn cycles, the more quickly its components will deteriorate. For that reason, **never leave the fireplace unattended while a new load is being fired hot**.

5.1.1 Plated Finish Maintenance

If your appliance has a plated finish, use a metal polish and a soft cloth to clean it. Do not use abrasives such as steel wool, steel pads or an abrasive cleaner for they may scratch the finish.

5.1.2 Glass Door Cleaning

Under normal conditions, your door glass should stay relatively clear. If your firewood is dry enough and you follow the operating instructions in this manual, a whitish, dusty deposit will form on the inside of the glass after a week or so of use. This is normal and can be easily removed when the fireplace is cool by wiping with a damp cloth or paper towel and then drying. **Never try to clean the glass when the fireplace is hot.**

In spring and fall when the fireplace is run at lower temperatures, you may see some light brown stains forming, especially at the lower corners of the glass. This indicates that the fire has been smoky and some of the smoke has condensed on the glass. When the weather is mild, you may find that letting the fire go out is better than trying to maintain a continuous fire. Use the technique described above for building a fire to take the chill off the house.

If you do get brown stains on the glass you can remove them with special cleaners for wood heater glass doors. **Do not use abrasives to clean your fireplace's door glass.**

The deposits that form on the glass are the best indication of the quality of your fuel and how well you are doing in operating the fireplace. Your goal should be clear glass with no brown stains. If you continue to see brown stains on the glass, something about your fuel and operating procedure needs to be changed. Stains on the glass indicate incomplete combustion of the wood, which also means more smoke emissions and faster formation of creosote in the chimney.

If you see brown streaks coming from the edge of the glass, it is time to replace the gasket around the glass. Visit your fireplace retailer to get the self-adhesive glass gasket and follow the instructions below for installation.

Do not abuse the glass door by striking or slamming shut. Do not use the fireplace if the glass is broken.

5.1.3 Door Adjustment

In order for your fireplace to burn at its best efficiency, the door must provide a perfect seal with the firebox. Therefore, the gasket should be inspected periodically to check for a good seal. The gasket seal may be improved with a simple latch mechanism adjustment. To adjust:

1. Remove the split pin by pulling and turning it using pliers. **(A)**

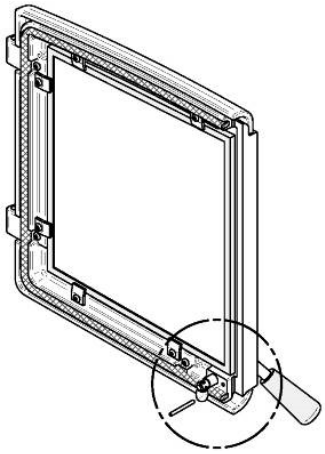

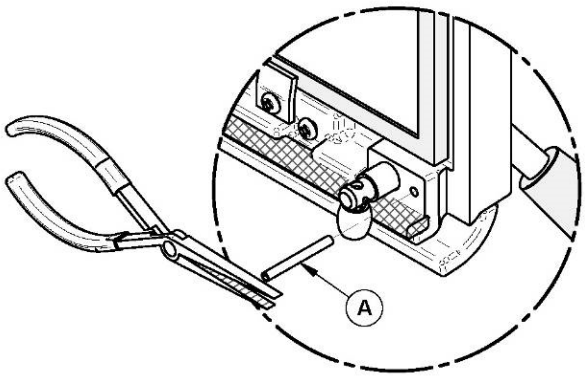

2. Turn the handle counter clock wise one turn to increase pressure. To reduce the pressure, when installing a new gasket for example, turn clock wise.

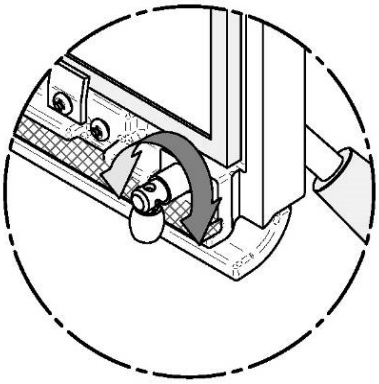

3. Re-install the split pin **(A)** with a small hammer.

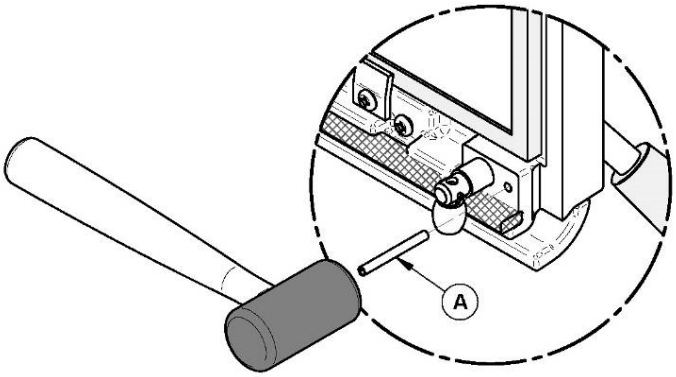

5.1.4 Door Alignment

To align, open the fireplace's door and loosen the pressures screws located on the lower and upper hinges of the door using a 3/32" Allen key to free the adjustable hinge rods.

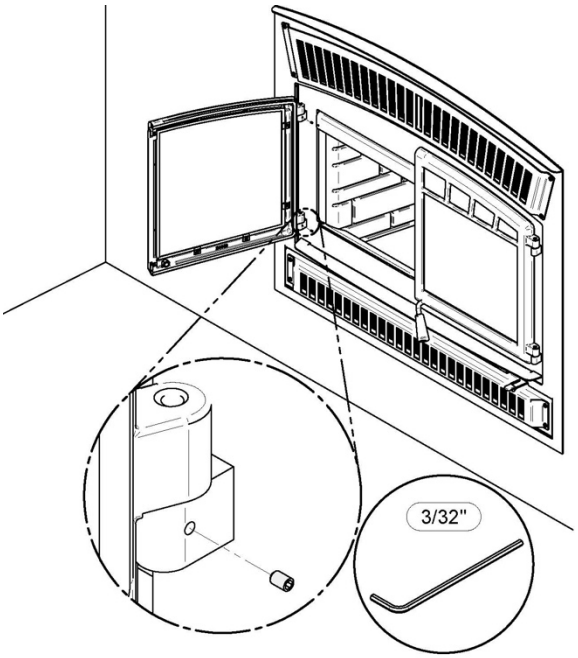

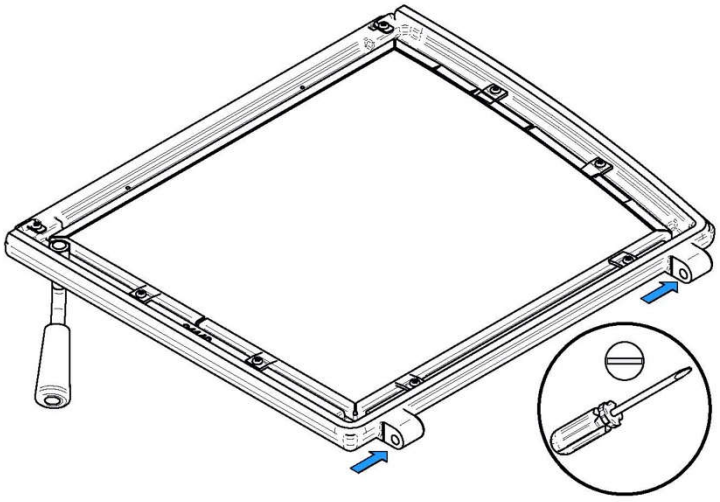

Using a flat screwdriver, turn the adjustable hinge rods in the direction shown to adjust the doors. Tighten all door hinge pressure screws when they are at the desired positions.

	DOORS POSITION WITH MORE SPACE		DOORS POSITION WITH LESS SPACE		DOORS TILT UP		DOORS TILT DOWN	
	LEFT	RIGHT	LEFT	RIGHT	LEFT	RIGHT	LEFT	RIGHT
TOP PINTLES								
BOTTOM PINTLES								

5.1.5 Replacing the Door Gaskets

It is important to maintain the gaskets in good condition. After a year or more of use, the doors gaskets will compress and become hard, which may allow air to leak past it. You can test the condition of the door gaskets by closing and latching the doors on a strip of paper. Test all around the door. If the paper slips out easily anywhere, it is time to replace the gasket.

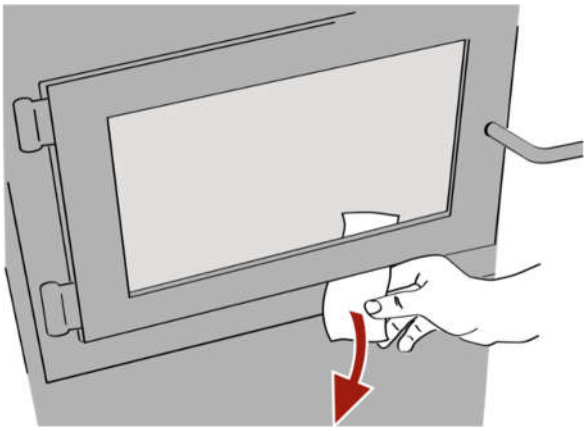

Use the correct replacement gasket: **(A)** for the doors and **(H)** for the doors junction. Both can be purchased from your retailer. The diameter and density of the gasket is important to getting a good seal.

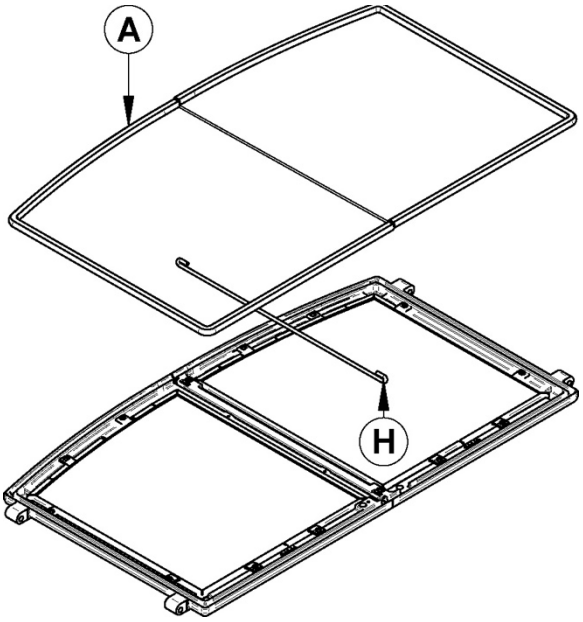

Place the door face-down on something soft like a cushion of rags or piece of carpet. Remove the old gaskets from the door by pulling and prying it out with an old screw driver. Then use the screwdriver to scrape the old gasket adhesive from the door. Now run a 1/4" (6 mm) bead of high temperature silicone in the door gasket groove. Starting from the middle of the hinge side, press the gasket into the groove. Do not stretch the gasket as you place it. Leave the gasket about 1/2" long when you cut it and press the end into the groove. Tuck any loose fibres under the gasket and into the silicone. Close the door and do not use the fireplace for 24 hours.

Location	Length	Dimensions
Door frame	65 ¾ " (167 cm)	Round 5/8" (1,59 cm)
Left door	18"	Round 1/4" (0,64cm)

5.1.6 Replacing the Door Glass

The glass used in the HE350 is 4 mm thick of dimension 17.78" x 15.76" (45,16cm x 40,03cm) and tested to reach temperatures up to 1400º F. If the glass breaks, it must be replaced with one having the same specification. Contact your Ventis dealer to obtain a genuine replacement part (see “replacement parts”, in appendix to get the proper part number).

WARNING

- **TEMPERED GLASS OR ORDINARY GLASS WILL NOT WITHSTAND THE HIGH TEMPERATURES OF THE HE350.**
- **DO NOT ABUSE THE GLASS DOOR BY SLAMMING IT AGAINST THR FIREPLACE.**
- **DO NOT OPERATE THE FIREPLACE WITH A CRACKED OR BROKEN GLASS.**

In order to replace the glass, use the following procedure:

1- Remove the gasket **(E)** placed around the door frame **(G)** and its adhesive.
2- Remove the12 glass retainers **(C)** held in place by 12 screws **(B)**.
3- Remove the glass **(F)** and/or debris from the frame.
4- Install the new window into the frame **(G)** and fasten it in place with the glass retainers **(C)** and the screws **(B)** removed earlier.
5- Handle the glass with care to avoid injury.

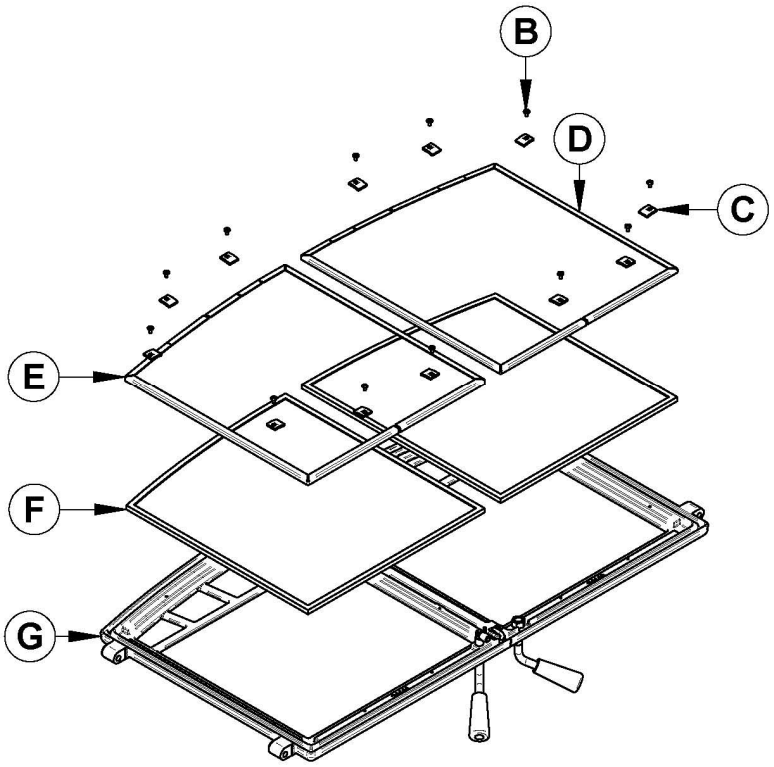

5.1.6.1 Replacing the door glass gasket

The gasket must be centred on the edge of the glass. To do this easily, peel back a section of the paper covering the adhesive and place the gasket on a table with the adhesive side up. Stick the end of the gasket to the middle of one edge, then press the edge of the glass down onto the gasket, taking care that it is perfectly centred on the gasket. Peel off more of the backing and rotate the glass and press the next section onto the gasket. Do not stretch the gasket as you place it. Continue until you get to the start and trim the gasket to length. Now pinch the gasket to the glass in a U shape, all around the glass. Reinstall the glass, being careful to centre the glass carefully in the door. Do not over-tighten the screws. Note that the two main causes of broken door glass are uneven placement in the door and over-tightening of retaining screws.

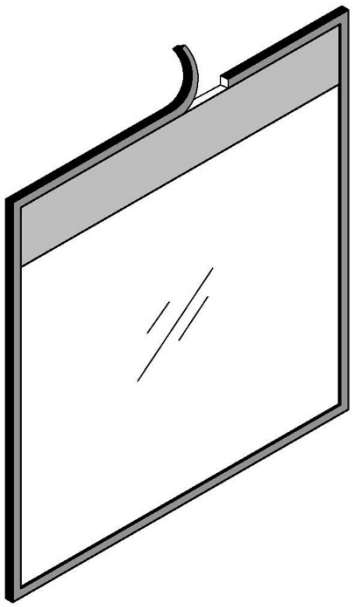

Location	Length	Dimension
Around glass	66" (168 cm)	“U” shaped

Do not abuse the glass door by striking or slamming shut. Do not use the fireplace if the glass is broken. To change the glass, perform the same operation described above.

5.1.7 Cleaning and Painting the Fireplace

Do not attempt to clean or paint the fireplace when the unit is hot. Painted surfaces can be wiped down with a damp cloth. Plated surfaces may be scratched by abrasive cleaners. To maintain the finish at its original brilliance, use only a damp soft cloth to clean plated surfaces.

If the paint becomes scratched or damaged, you can give your wood fireplace a brand new look by repainting it with heat-resistant paint. Before painting, roughen the surface with fine sand paper, wipe it down to remove dust, and apply two thin coats of paint. For best results, use the same paint that was originally used on the fireplace, which is available in spray cans. See your dealer for details.

5.2 Chimney and Chimney Liner Maintenance

5.2.1 Why Chimney Cleaning is Necessary

Wood smoke can condense inside the chimney liner and chimney, forming a combustible deposit called creosote. If creosote is allowed to build up in the venting system it can ignite when a hot fire is burned in the

fireplace and a very hot fire can progress to the top of the chimney. Severe chimney fires can damage even the best chimneys. Smouldering, smoky fires can quickly cause a thick layer of creosote to form. When you avoid smouldering so the exhaust from the chimney is mostly clear, creosote builds up more slowly. Your new fireplace has the right characteristics to help you to burn clean fires with little or no smoke, resulting in less creosote in the chimney.

5.2.2 How Often Should You Clean the Chimney?

It is not possible to predict how much or how quickly creosote will form in your chimney. It is important, therefore, to check the build-up in your chimney monthly when getting used to the new fireplace until you determine the rate of creosote formation. Even if creosote forms slowly in your system, the chimney should be cleaned and inspected at least once each year. Do not allow more than 1/8″ (3 mm) creosote buildup in the chimney.

It is recommended to clean thoroughly the chimney system at the end of every heating season. During summer, the air is damper and with minimal air circulation within the stove or furnace, it can mix with creosote and/or sooth deposits in the chimney system to form an acid that could accelerate the corrosion process and induce premature decay of the steel. Corrosion damages are not covered under warranty. Have your chimney system cleaned by a professional chimney sweep. Use a plastic or steel brush.

Contact your local municipal or provincial fire authority for information on how to handle a chimney fire. Have a clearly understood plan to handle a chimney fire.

5.2.3 Cleaning the Chimney

Chimney cleaning can be a difficult and dangerous job. If you don't have experience cleaning chimneys, you might want to hire a professional chimney sweep to clean and inspect the system for the first time. After having seen the cleaning process, you can decide if it is a job you would like to take on.

The most common equipment used are fibreglass rods with threaded fittings and stiff plastic brushes. The brush is forced up and down inside the chimney flue to scrub off the creosote.

The chimney should be checked regularly for creosote build-up. Inspection and cleaning of the chimney can be facilitated by removing the baffle.



NOTE

- **DO NOT EXPECT CHEMICAL CLEANERS TO KEEP YOUR CHIMNEY CLEAN.**
- **THE RAIN CAP CAN BE REMOVED FOR INSPECTION AND/OR CLEANING OF THE CHIMNEY.**

The chimney should be swept following these steps:

1. Remove the baffle and air tubes.
2. Remove the rain cap.
3. Sweep the chimney.
4. Clean the inside of the firebox.
5. Re-install the baffle, the air tubes and the rain cap.

CAUTION
OPERATION OF YOUR HE350 WITHOUT THE BAFFLE MAY CAUSE UNSAFE AND HAZARDOUS TEMPERATURE CONDITIONS AND WILL VOID THE WARRANTY.

5.2.4 Fire Baffle Removal Prior to Cleaning the Chimney

Before starting to clean your chimney, we recommend that you remove the fire baffle to avoid creosote dust collection on top of the baffle.

Follow the steps below to remove the fire baffle:

1. Remove the front air tube by pulling out the cutter pin on the side of the tube. They are located at the top, underneath the baffle.
2. Lift the baffle and slide it out of the fireplace. You now have access to the chimney.

See **APPENDIX 6 - INSTALLATION OF SECONDARY AIR TUBES AND** BAFFLE for details.

5.2.5 Chimney Fire

Regular chimney maintenance and inspection can prevent chimney fires. If you have a chimney fire, follow these steps:

1. Close the fireplace door and the air intake controls;
2. Alert your family of the possible danger;
3. If you require assistance, alert your fire department;
4. If possible, use a dry chemical fire extinguisher, baking soda or sand to control the fire. Do not use water as it may cause a dangerous steam explosion;
5. Check outside to ensure that sparks and hot embers coming out of the chimney are not igniting the roof;
6. Do not use the fireplace again until your chimney and fireplace have been inspected by a qualified chimney sweep or a Fire Department Inspector.

PART B – INSTALLATION

Install the fireplace only as described in these instructions and using only components from the chimney manufacturers listed in Erreur ! Source du renvoi introuvable..

Parts Required

- HE350 Fireplace
- Traditional style faceplate - metallic black
- Classic moulded refractory brick panels
- Insulated chimney made by the manufacturers listed in Erreur ! Source du renvoi introuvable., with the corresponding specifications:
  - Chimney lengths
  - Elbows (where necessary)
  - Associated components as per these installation instructions

Additional Equipment (optional)

- Forced air distribution kit
- Insulated flex pipe for forced air distribution kit
- Warm air circulation grille - modern style

6 SAFETY INFORMATION

6.1 Summary of Installation Cautions and Warnings

- **THE INFORMATION GIVEN ON THE CERTIFICATION LABEL AFFIXED TO THE APPLIANCE ALWAYS OVERRIDES THE INFORMATION PUBLISHED, IN ANY OTHER MEDIA (OWNER'S MANUAL, CATALOGUES, FLYERS, MAGAZINES AND/OR WEB SITES).**
- **MIXING OF APPLIANCE COMPONENTS FROM DIFFERENT SOURCES OR MODIFYING COMPONENTS MAY RESULT IN HAZARDOUS CONDTIONS.**
- **ANY MODIFICATION OF THE APPLIANCE THAT HAS NOT BEEN APPROVED IN WRITING BY THE TESTING AUTHORITY VIOLATES CSA B365 (CANADA), AND ANSI NFPA 211 (USA).**
- **IF REQUIRED, A SUPPLY OF COMBUSTION AIR SHALL BE PROVIDED TO THE ROOM.**
- **DO NOT CONNECT TO OR USE IN CONJUNCTION WITH ANY AIR DISTRIBUTION DUCTWORK**
- **DO NOT CONNECT THIS UNIT TO A CHIMNEY FLUE SERVING ANOTHER APPLIANCE.**
- **THIS FIREPLACE HAS NOT BEEN TESTED TO BE INSTALLED IN A MOBILE HOME.**
- **THIS FIREPLACE HAS NOT BEEN TESTED TO BE INSTALLED INSIDE A MASONRY CHIMNEY.**

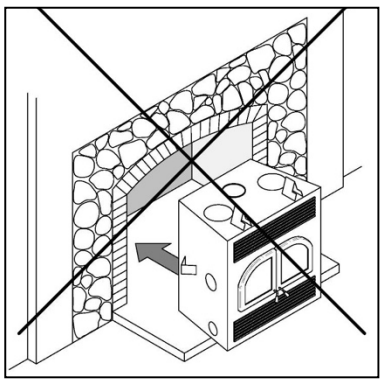

6.2 Regulations Covering Fireplace Installation

When installed and operated as described in these instructions, the HE350 wood fireplace is suitable for use in residential installations.

In Canada, the CSA B365 Installation Code for Solid Fuel Burning Appliances and Equipment and the CSA C22.1 Canadian National Electrical Code are to be followed in the absence of local code requirements. In the USA, the ANSI NFPA 211 Standard for Chimneys, Fireplaces, Vents and Solid Fuel-Burning Appliances and the ANSI NFPA 70 National Electrical Code are to be followed in the absence of local code requirements.

NOTE

THE FIREPLACE IS NOT APPROVED FOR USE WITH A SO-CALLED "POSITIVE FLUE CONNECTION" TO THE CLAY TILE OF A MASONRY CHIMNEY.

6.3 Fireplace Installation

6.3.1 Standoff installation

BEFORE INSTALLING YOUR FIREPLACE, YOU MUST INSTALL THE TWO STANDOFFS ON THE SIDE AND THE TWO STANDOFFS ON THE BACK OF THE FIREPLACE.

The standoffs are in the firebox of the fireplace and the screws are with the manual kit. Using the screws provided, install two standoffs on each side and two standoffs at the back.

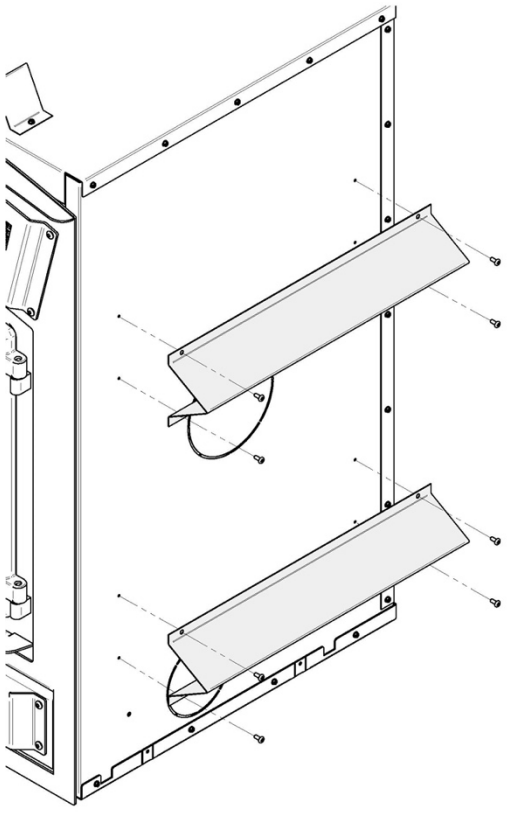

Side standoffs

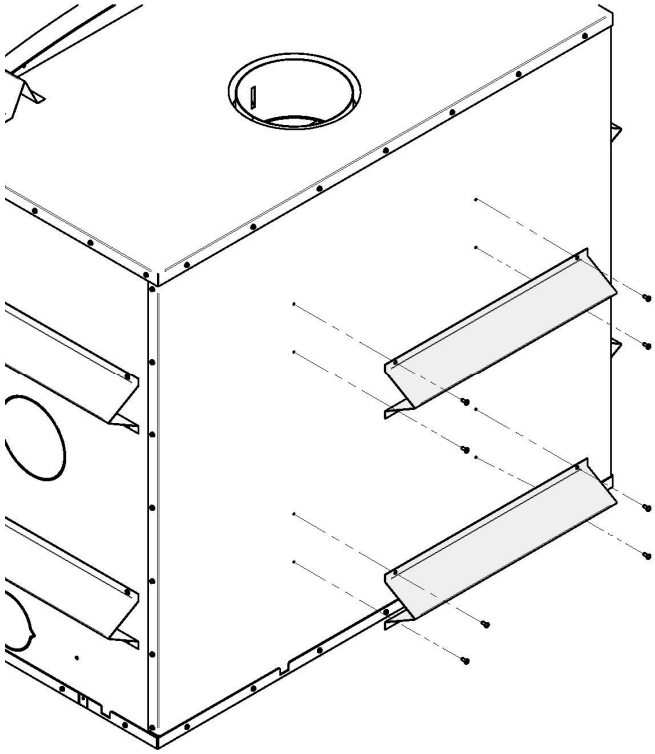

Back standoffs

6.3.2 Transportation Packaging

To facilitate transportation of the HE350 fireplace before installation, we have designed a transportation packaging that allows reducing the weight. The fireplace refractory panels are in a box you can carry separately. We suggest you install the refractory panels after the setting up of the fireplace. To install the refractory panels, see **APPENDIX 5 - REFRACTORY SLABS REPLACEMENT.**

6.3.3 Locating the HE350

The best location to install your fireplace is determined by considering the location of windows, doors, and the traffic flow in the room where the fireplace is located, allowing space in front of the unit for the hearth extension and the mantel, and taking into consideration the location of the hot air ducts (optional), outside air kit and chimney. If possible, choose a location where the vent will not interfere with any truss, roof beams, wall studs, water pipes or electrical wiring. It may be easier to relocate the fireplace than to rework the building structure. Also choose a location that allows installing the least amount of offsets in the chimney.

Usually, no additional floor support is needed for the fireplace. The adequacy of the floor can be checked by first estimating the weight of the fireplace system. Weights are given in section **2.2 - General Features**. Next, measure the area occupied by the fireplace which is normally 50 3/4" X 26 7/8" (128.9 cm x 68.6 cm). Note the floor construction and consult your local building code to determine if additional support is needed.

WARNING

THE FIREPLACE MUST BE INSTALLED ON A LEVEL AND STRAIGHT (NOT UNEVEN) SURFACE.

6.3.4 Clearances to combustible materials

The clearances shown in this section have been determined by test according to procedures set out in safety standards ULC-S610 (Canada) and UL127 (U.S.A.). When the fireplace is installed so that its surfaces are at or beyond the minimum clearances specified, combustible surfaces will not overheat under normal and even abnormal operating conditions.

WARNING

NO PART OF THE FIREPLACE MAY BE LOCATED CLOSER TO COMBUSTIBLES THAN THE MINIMUM CLEARANCE FIGURES GIVEN.

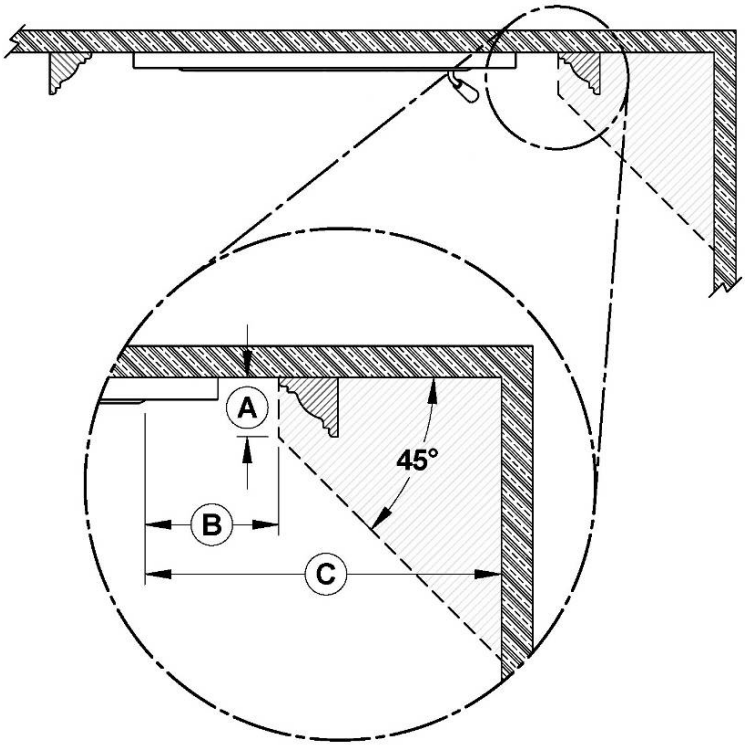

	CLEARANCES*
A	6" (152 mm)
B	8" (203 mm)
C	24" (610 mm)

*Measurements are from the door opening.

	Side Mantle

Wall in front of fireplace: 48"
Ceiling: 84 in. (2.13 m) measured from the base of the fireplace.
Fireplace enclosure:

Back: 0"
Sides: 0"
Floor (under the fireplace): 0"
Chimney: 2" (50 mm)

6.3.5 Hearth extension construction options

The HE350 may be installed directly on the floor or on a raised combustible or non-combustible base. Installation can be done using one of the following options:

Option	Installation type	R factor required	Non-combustible floor protection lenght
#1	Directly on the floor	Yes (2.00)	32" (813 mm)
#2	Installation raised less than 8" from floor	Yes (2.00)	32" (813 mm)
#3	Installation on a more than 8"raised base	Yes (2.00)	16" (406 mm)
#4	Installation raised between 8" and 12" from floor	Yes (1.00)	20" (508 mm)
#5	Installation raised more than 12" from floor	No	16" (406 mm)

6.3.5.1 Option #1 - Installation directly on the floor

- A 2.00 R value for the hearth extension is required. The non-combustible hearth extension floor area must extend at least 32" (813 mm) **(B)** in front of the hearth.
- The joint between the hearth extension and the fireplace **(E)**, for the entire width of the floor protection, must be protected by a bent and continuous piece of sheet metal (not included).
- An 84" clearance between the fireplace base and the ceiling **(A)** must be respected.

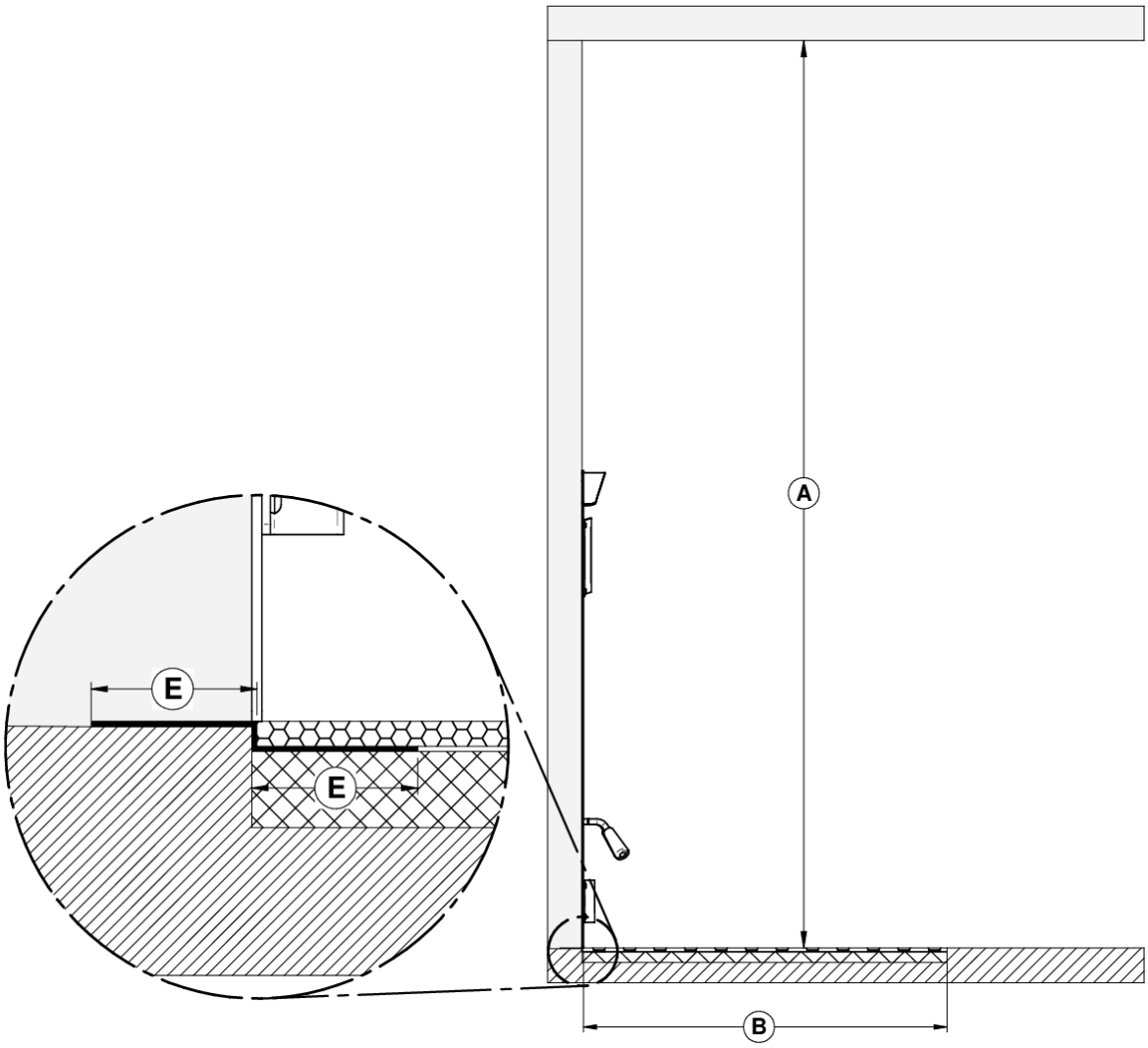

	MINIMUM MEASUREMENTS
A	84" (2134 mm)
B	32" (813mm)
E	2" (51 mm)

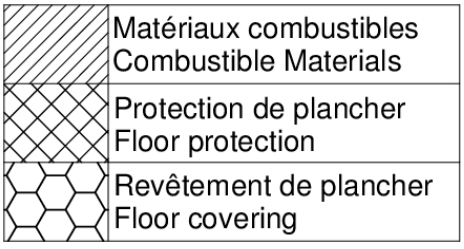

NOTE

The floor under the fireplace should match or exceed the height of the floor protection.

6.3.5.2 Option #2 - Installation raised less than 8 "from floor

- A 2.00 R value for the hearth extension is required. The non-combustible hearth extension floor area must extend at least 32" (813 mm) **(B)** in front of the hearth.
- The upper and lower angle, for the full width of the floor protection, must be protected 2" horizontally and 2" vertically (**E**) by a bent and continuous piece of sheet metal (not included). Apart from these two corners, the sheet metal does not have to cover the rest of the wall between the base of the fireplace and the floor.
- An 84" clearance between the fireplace base and the ceiling **(A)** must be respected.

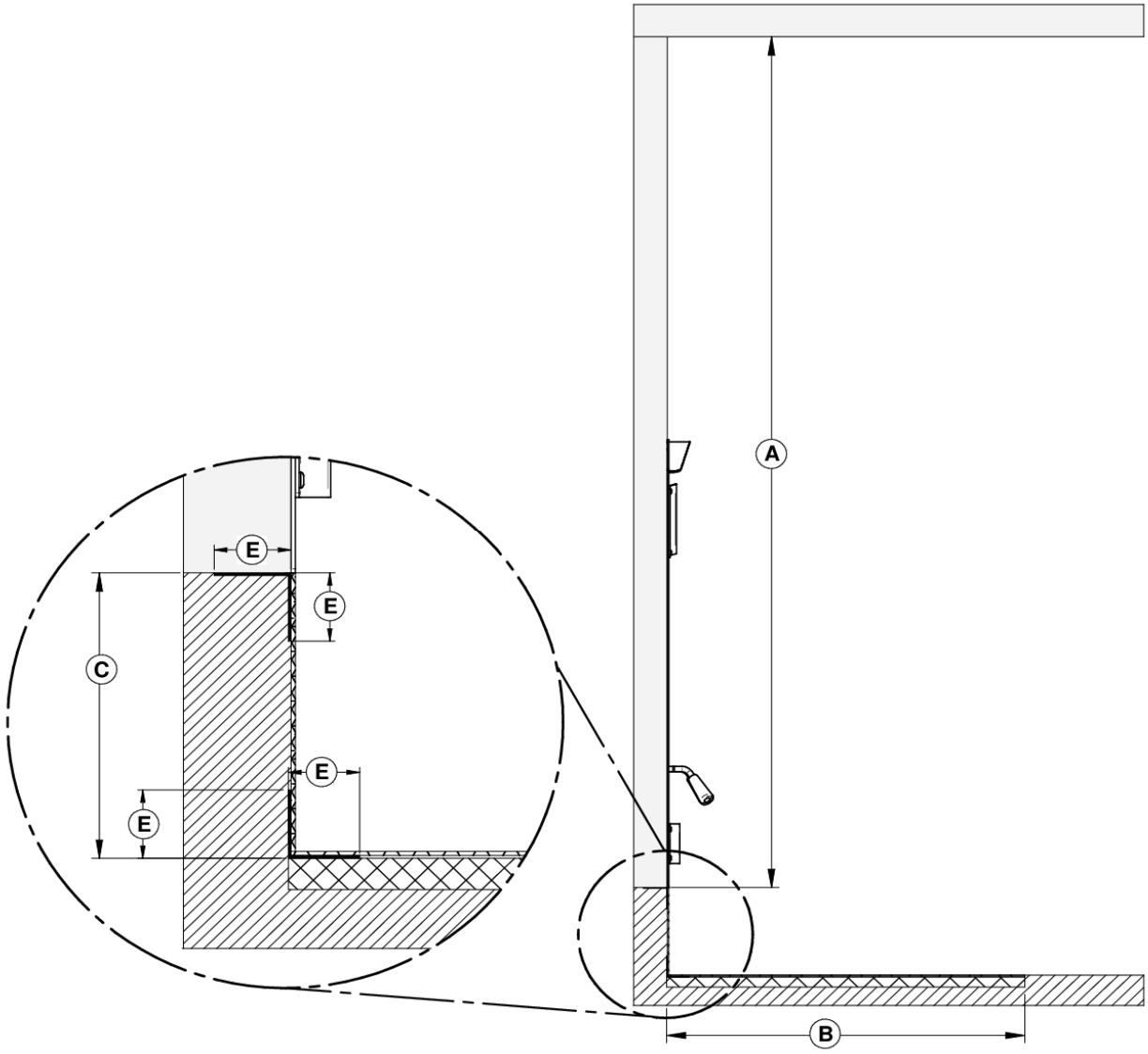

	MINIMUM MEASUREMENTS
A	84" (2134 mm)
B	32" (813mm)
C	Less than 8" (203 mm)
E	2" (51 mm)

	Matériaux combustibles Combustible Materials
	Protection de plancher Floor protection
	Revêtement de plancher Floor covering

6.3.5.3 Option #3 - Installation on a more than 8" raised base

- When installed on a more than 8" (203 mm) raised base **(C)**, A 2.00 R value for the hearth extension is required. The non-combustible hearth extension floor area must extend at least 16" (406 mm) **(B)** in front of the hearth.
- The joint between the hearth extension and the fireplace **(E)**, for the entire width of the floor protection, must be protected by a bent and continuous piece of sheet metal (not included).
- An 84" clearance between the fireplace base and the ceiling **(A)** must be respected.

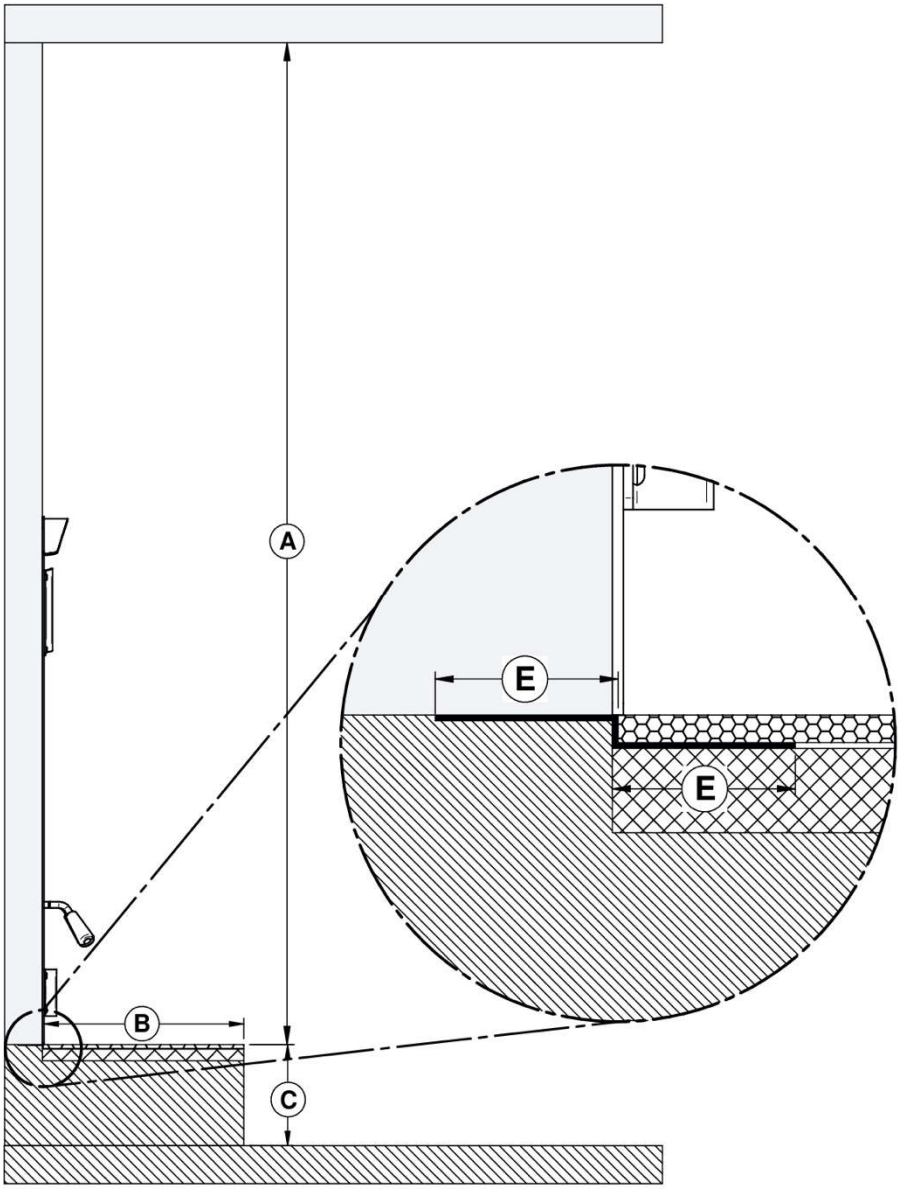

	MINIMUM MEASUREMENTS
A	84" (2134 mm)
B	16" (406mm)
C	More than 8" (203 mm)
E	2" (51 mm)

	Matériaux combustibles Combustible Materials
	Protection de plancher Floor protection
	Revêtement de plancher Floor covering

6.3.5.4 Option #4 - Installation raised between 8" and 12" from floor

- A 1.00 R value for the hearth extension is required. The non-combustible hearth extension floor area must extend at least 20" (508 mm) **(B)** in front of the hearth.
- The upper and lower angle, for the full width of the floor protection, must be protected 2" horizontally and 2" vertically (**E**) by a bent and continuous piece of sheet metal (not included). Apart from these two corners, the sheet metal does not have to cover the rest of the wall between the base of the fireplace and the floor.
- An 84" clearance between the fireplace base and the ceiling **(A)** must be respected.

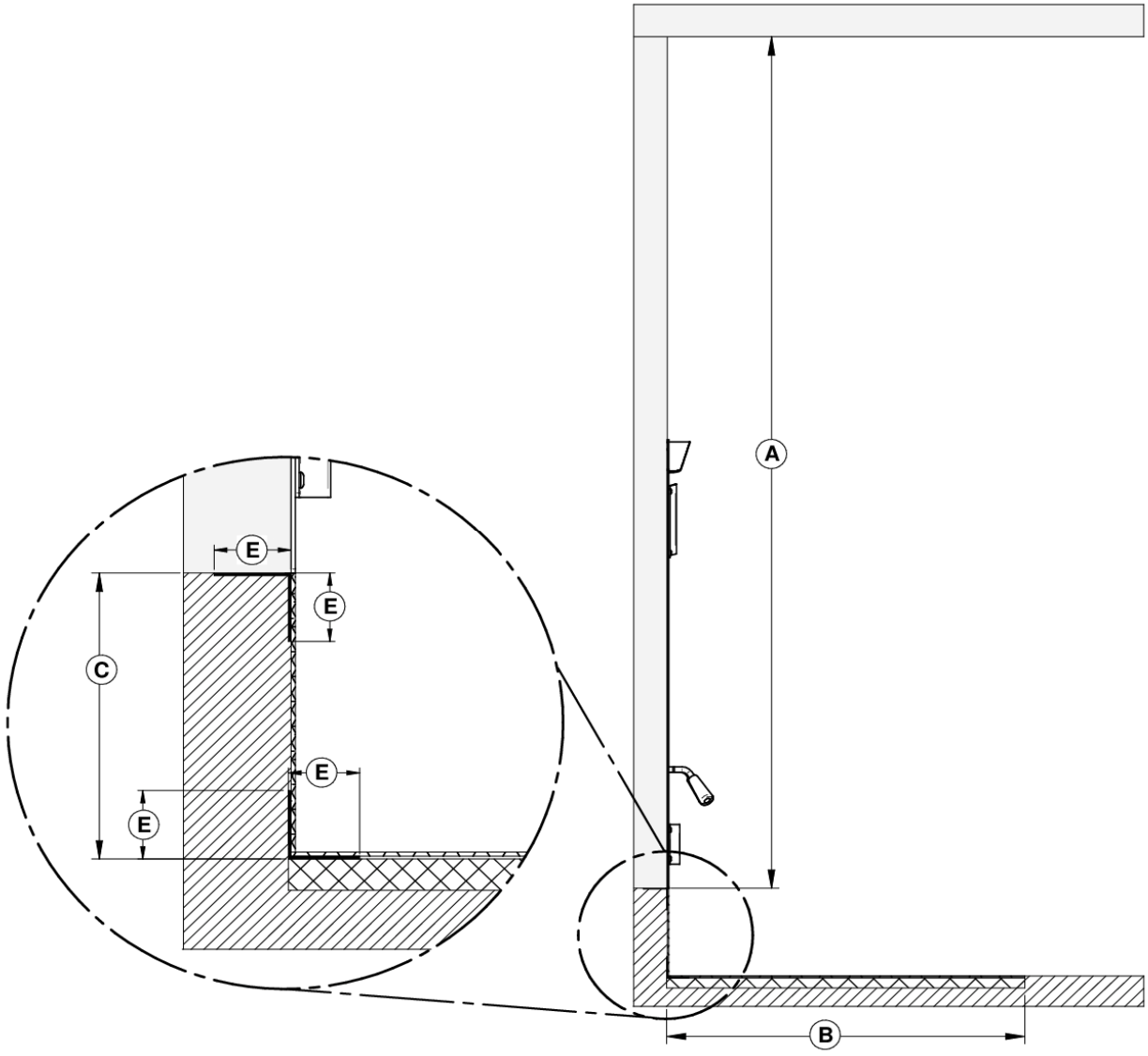

	MINIMUM MEASUREMENTS
A	84" (2134 mm)
B	20" (508 mm)
C	Between 8" and 12"
E	2" (51 mm)

	Matériaux combustibles Combustible Materials
	Protection de plancher Floor protection
	Revêtement de plancher Floor covering

6.3.5.5 Option #5 - Installation raised more than 12" from floor

- No R value for the hearth extension is required. The non-combustible hearth extension floor area must extend at least 16" (406 mm) **(B)** in front of the hearth.
- The upper and lower angle, for the full width of the floor protection, must be protected 2" horizontally and 2" vertically (**E**) by a bent and continuous piece of sheet metal (not included). Apart from these two corners, the sheet metal does not have to cover the rest of the wall between the base of the fireplace and the floor.
- An 84" clearance between the fireplace base and the ceiling **(A)** must be respected.

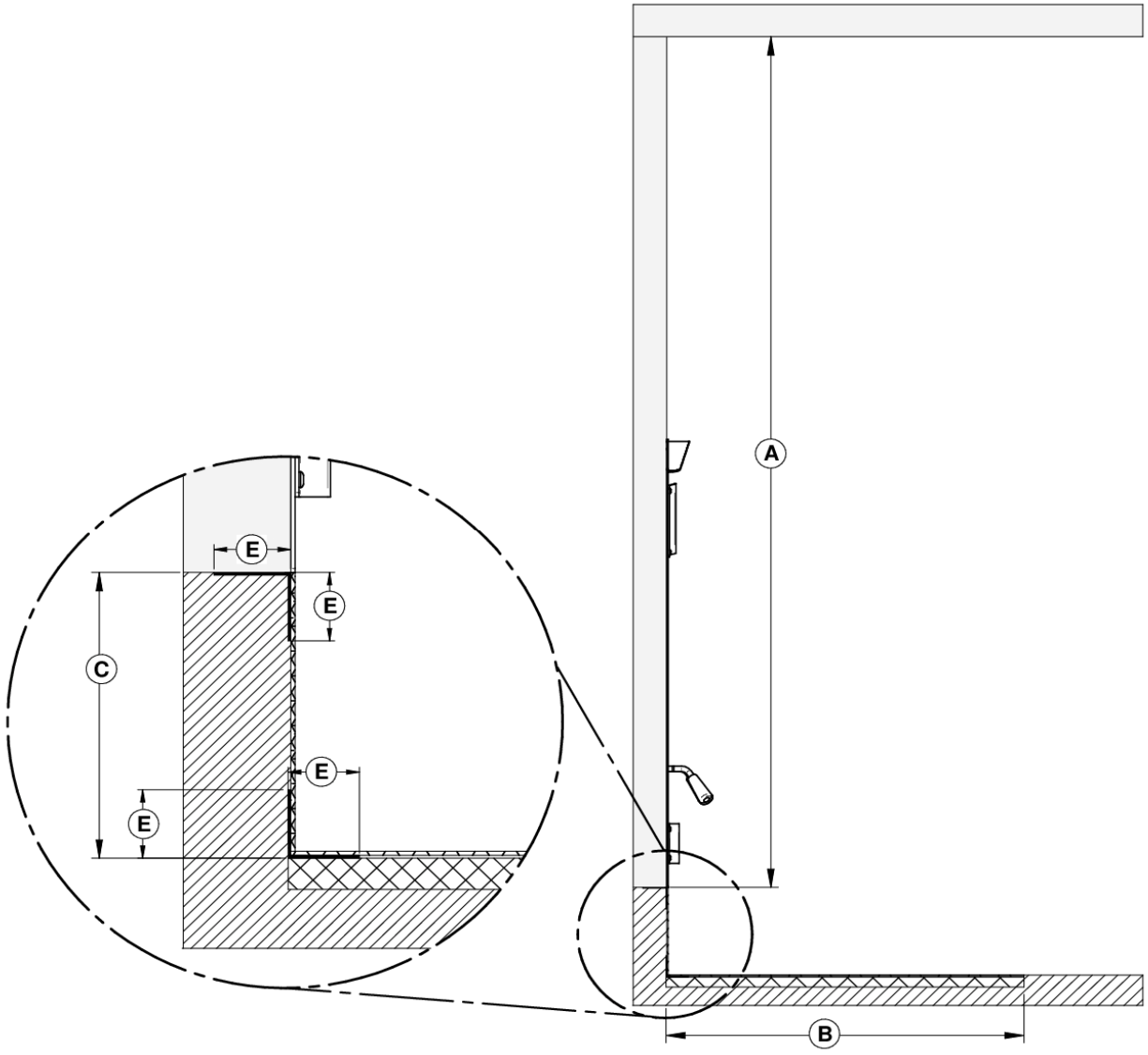

	MINIMUM MEASUREMENTS
A	84" (2134 mm)
B	16" (406 mm)
C	12" and more
E	2" (51 mm)

	Matériaux combustibles Combustible Materials
	Protection de plancher Floor protection
	Revêtement de plancher Floor covering

6.3.5.6 R Calculations

The use of an R value is convenient when more than one material is going to be used in the hearth extension to cover the combustible surface. This is because R values are additive, whereas K values are not. To find the corresponding R factor to use for some selected materials, please see **Table 1 : Thermal Characteristics of Common Floor Protection Materials*.**

There are two ways to calculate the R factor of the floor protection. First, by adding the R-values of the proposed materials or if some K and thickness values are given, by converting them to R values.

To calculate the R factor for a composite floor protection made of a combination of alternative materials, simply add the R-values of those materials. If the result is equal to or larger than the required R value, the combination is acceptable. For R-values of some selected materials, see **Table 1 : Thermal Characteristics of Common Floor Protection Materials***

Example: If the required floor protection R is equal or higher than 1.00. Proposed materials: four inches of brick and one inch of Durock® board:

Four inches of brick (R = 4 x 0.2 = 0.8) + 1 inch of Durock® (R = 1 x 0.52 = 0.52). 0.8 + 0.52 = 1.32 This R value is larger than the required 1.00 and is therefore acceptable.

In the case of a known K and thickness of alternative materials to be used in combination, convert all K values to R by dividing the thickness of each material by its K value. Add the R values of your proposed materials as shown in the previous example. In the previous example: Four inches of brick (K = 4/5 = 0.8) + 1 inch of Durock® (R = 1 / 1.92 = 0.52). 0,8 + 0,52 = 1,32.

Table 1 : Thermal Characteristics of Common Floor Protection Materials*

MATERIAL	CONDUCTIVITY (k) PER INCH	RESISTANCE (R) PER INCH THICKNESS
Micore® 160	0.39	2.54
Micore® 300	0.49	2.06
Durock®	1.92	0.52
Hardibacker®	1.95	0.51
Hardibacker® 500	2.3	0.44
Wonderboard®	3.23	0.31
Cement mortar	5.00	0.2
Common brick	5.00	0.2
Face brick	9.00	0.11
Marble	14.3 – 20.00	0.07 – 0.05
Ceramic tile	12.5	0.008
Concrete	1.050	0.950
Mineral wool insulation	0.320	3.120
Limestone	6.5	0.153
Ceramic board (Fibremax)	0.450	2.2
Horizontal still air** (1/8")	0.135	0,920**

* Information as reported by manufacturers and other resources.

** For a 1/8" thickness. You cannot «stack» horizontal still air to accumulate R-values; you must separate each layer of horizontal still air with another non-combustible material.

6.3.6 Minimum Hearth Extension Requirements

Option	Installation type	R factor required	A	B	C
#1	Directly on the floor	Yes (2.00)	32"	49"	8"
#2	Installation raised less than 8" from floor	Yes (2.00)	32"	49"	8"
#3	Installation on a more than 8"raised base	Yes (2.00)	16"	49"	8"
#4	Installation raised between 8" and 12" from floor	Yes (1.00)	20"	49"	8"
#5	Installation raised 12" or more from floor	No	16"	49"	8"

For whether installation, the hearth extension floor area must extend at least 8" (203 mm) on each side of the door opening **(C)**. The joint between the hearth extension and the fireplace hearth needs to be made of a piece sheet metal (not included).

The floor protection must be a continuous (grouted joints) non-combustible material such as ceramic tile*, cement board, brick, millboard or equivalent, or any other approved or listed material suited for floor protection. Note that any type of tile will require a continuous non-combustible sheet beneath to prevent the possibility of embers falling through to the combustible floor if cracks or separation should occur in the finished surface. Check local codes for approved alternatives.

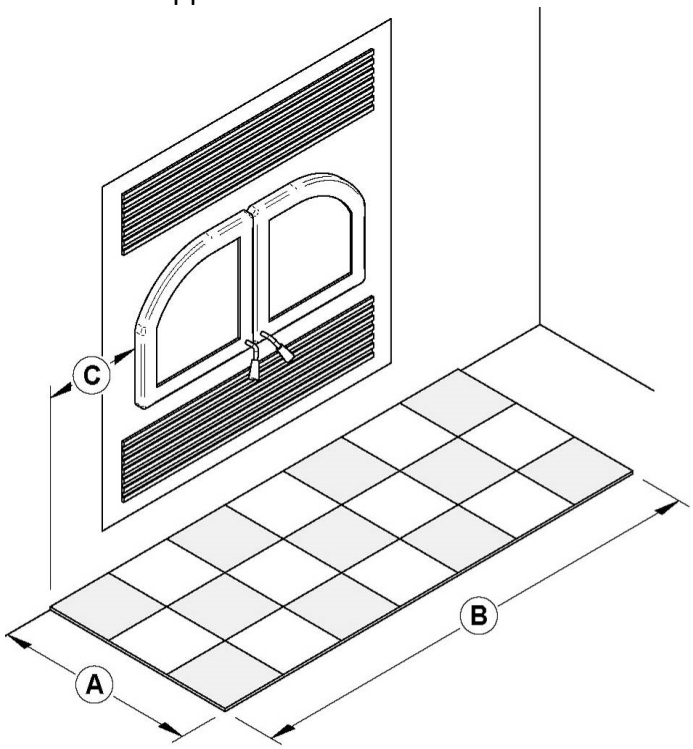

CAUTION

DO NOT LEAVE CARPET UNDER THE FLOOR PROTECTION IN FRONT OF THE FIREPLACE.

6.3.7 Framing construction

6.3.7.1 Framing

The construction of the framing, facing, and mantel must be in accordance with the standards and the following instructions:

Frame the sides and back of the fireplace using 2" × 3" (5 cm x 8 cm) or heavier lumber. However, the front studs as well as headers on top of the fireplace must be of a depth no more than the depth of the top standoffs.

Frame the fireplace with vertical studs at the sides of the fireplace running from floor to ceiling. Position the studs back from the front edge of the fireplace, a space the thickness of the facing material so that the facing can be installed flush with the fireplace facing. Frame headers between the vertical studs only as follows:

- Place the front facing headers in 2" × 3" or of a depth no more than the depth of the top standoffs. Do not put wood or any material within the area above the fireplace.
- Place headers only as required to support the facing and mantel.

WARNING

- **DO NOT PACK REQUIRED AIR SPACES WITH INSULATION OR OTHER MATERIAL.**
- **THE FIREPLACE MUST NOT BE IN CONTACT WITH ANY INSULATION OR LOOSE FILLING MATERIAL. COVER THE INSULATION WITH DRYWALL PANELS AROUND THE FIREPLACE.**
- **COMBUSTIBLE FRAMING MATERIAL CANNOT BE USED IN THE SPACE DIRECTLY ABOVE THE FIREPLACE. THIS AREA MUST REMAIN EMPTY FOR A HEIGHT OF 84" (2.13 M) MEASURED FROM THE BASE OF THE FIREPLACE.**

LEGEND	
	Combustible material allowed in this area
	Non-combustible material only in this area

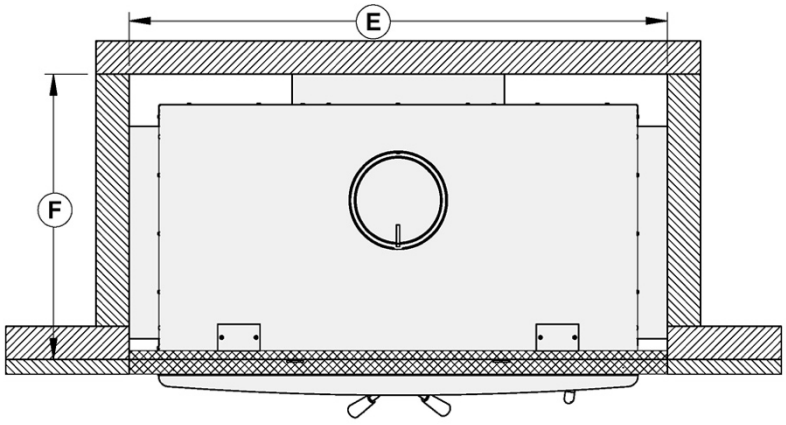

	MEASURMENTS
E	50 3/4" (128,8 cm)
F	26 7/8" (68,3 cm)

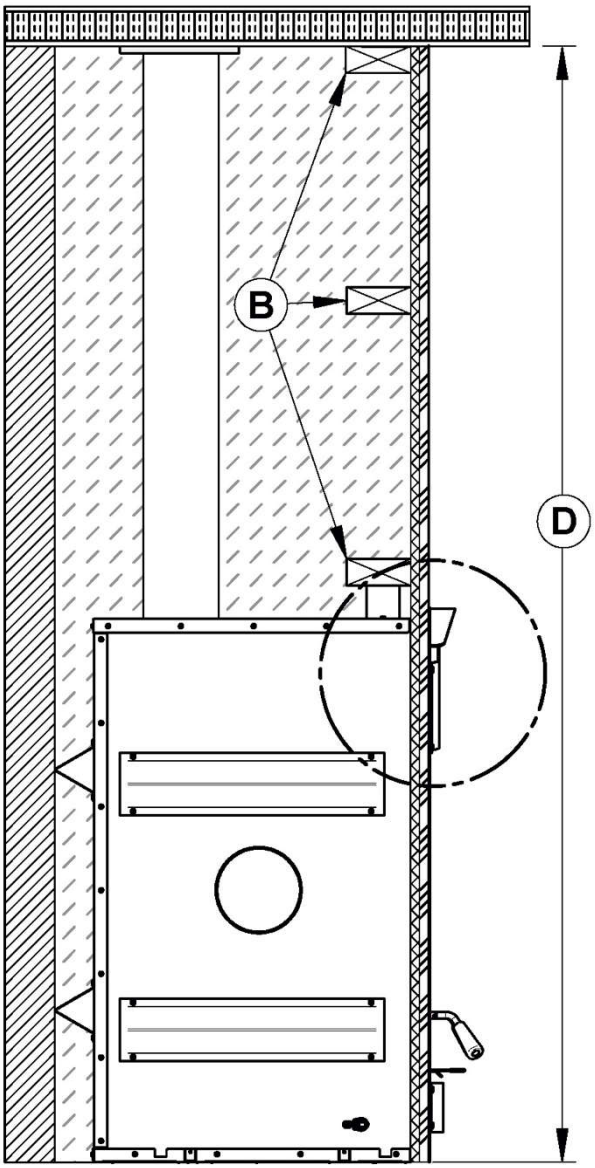

B	NON-COMBUSTIBLE FRAMING (STEEL STUD)

	CLEARANCE
D	84" (2.13m)

This section must remain empty

Non-combustible material

Non-combustible finishing material

Refer to the building code or the local code for regulations concerning the need to install finishing material inside the chase around the fireplace.

NOTE

THIS FIREPLACE IS BUILT IN ORDER TO MAINTAIN A 1/2" GAP MINIMUM BETWEEN THE FIREPLACE AND THE FACEPLACE.

IT IS RECOMMANDED TO HAVE THE NON-COMBUSTIBLE MATERIAL FLUSH WITH THE FIREPLACE.

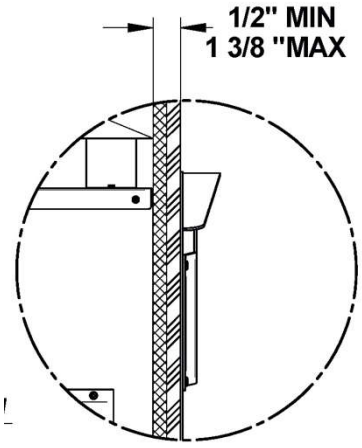

6.3.7.2 Framing when installing a fresh air intake kit or a forced air kit

- See **APPENDIX 4 - INSTALLING THE FRESH AIR INTAKE** KIT for installation instructions of a fresh air intake kit **(L)**.
- See **APPENDIX 2 – FORCED AIR DISTRIBUTION KIT (VA4460) for** more details on installing the forced air kit **(K)**

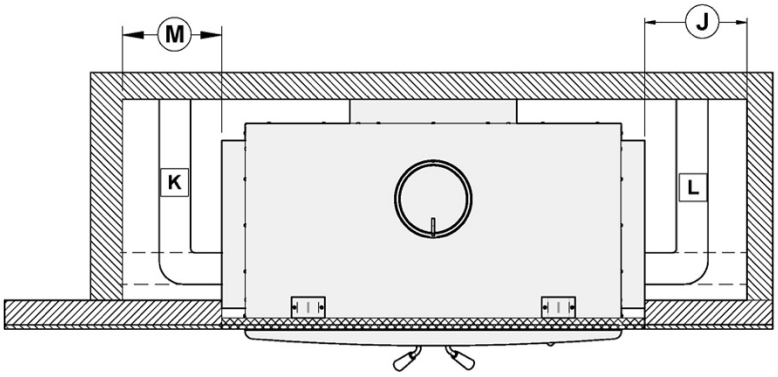

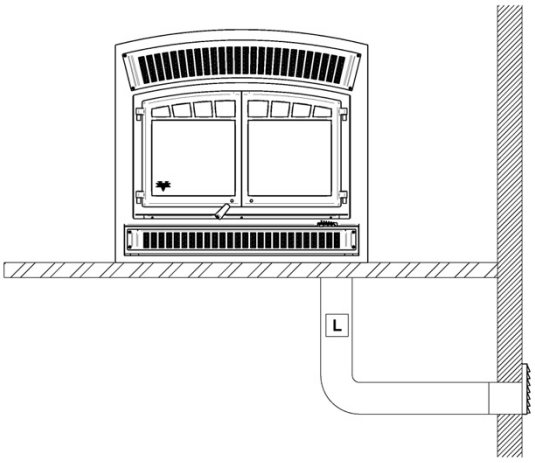

Refer to the building code or the local code for regulations concerning the need to install finishing material inside the chase around the fireplace.

CAUTION

FLEXIBLE PIPE IN THE FRAMING ENCLOSURE MUST NOT BE WITHIN STANDOFFS.

	MINIMUM MEASUREMENTS FOR FRESH AIR INTAKE (J)*	MINIMUM MEASUREMENTS FOR FORCED AIR KIT (M)*
J	6" (152 mm)	
M		10" (254 mm)

*The fresh air intake kit may be installed on the right side and at the bottom of the fireplace. Forced air distribution kit may be installed on either side of the fireplace.

6.3.7.3 Framing for a corner installation

CAUTION

VALUES (M) AND (N) ARE MINIMUM MEASUREMENTS. THEY MAY NEED TO BE INCREASED TO ALLOW INSTALLATION OF A FRESH AIR INTAKE KIT OR FORCED AIR KIT, OR DEPENDING ON THE FINISH MATERIAL USED.

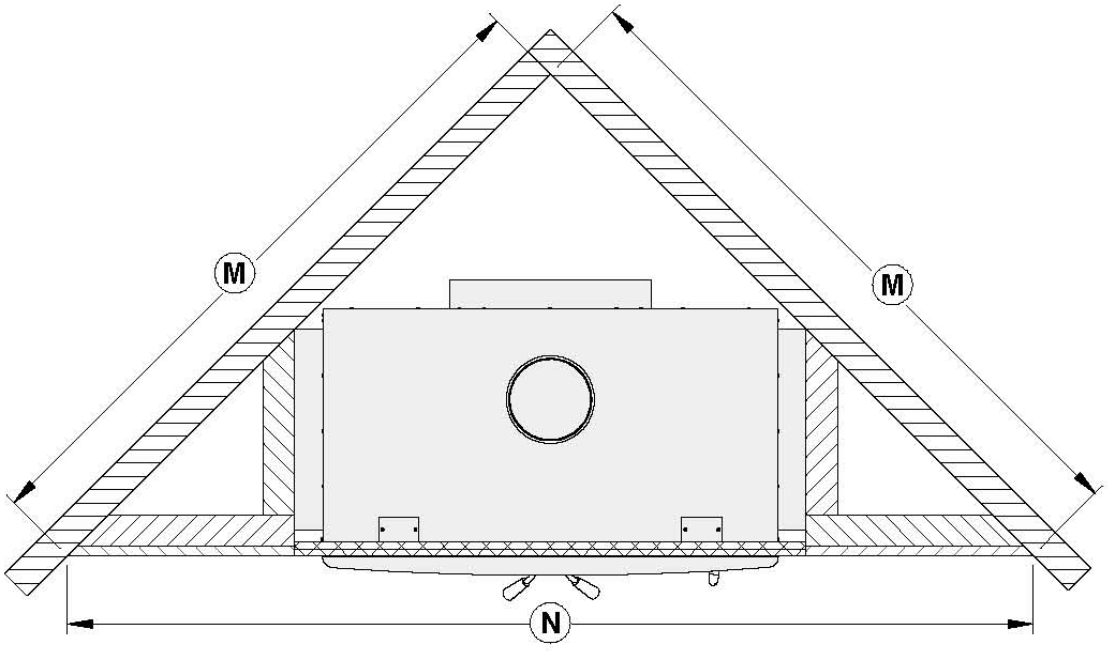

	MEASUREMENTS
M	67 5/8" (1718 mm)
N	95 11/16" (2430 mm)

Refer to the building code or the local code for regulations concerning the need to install finishing material inside the chase around the fireplace.

6.3.8 Facing

Materials directly in the front of the fireplace, must be non-combustible and have the minimum dimensions shown on the following section.

Non-combustible materials such as brick, stone or ceramic tile may project in front of and onto the fireplace decorative frame.

CAUTION

MATERIALS MUST BE INSTALLED SO THAT THE FACEPLATE MAY BE REMOVED AFTER THE INSTALLATION. THE FACEPLATE IS DESIGNED TO OVERLAP THE MATERIAL SURROUNDING THE FIREPLACE. IF THE MATERIAL IS THICKER, USE A FACEPLATE GAUGE FOR POSITIONING AND MAKE SURE THAT THE FACEPLATE CAN BE REMOVED AFTER IT HAS BEEN INSTALLED.

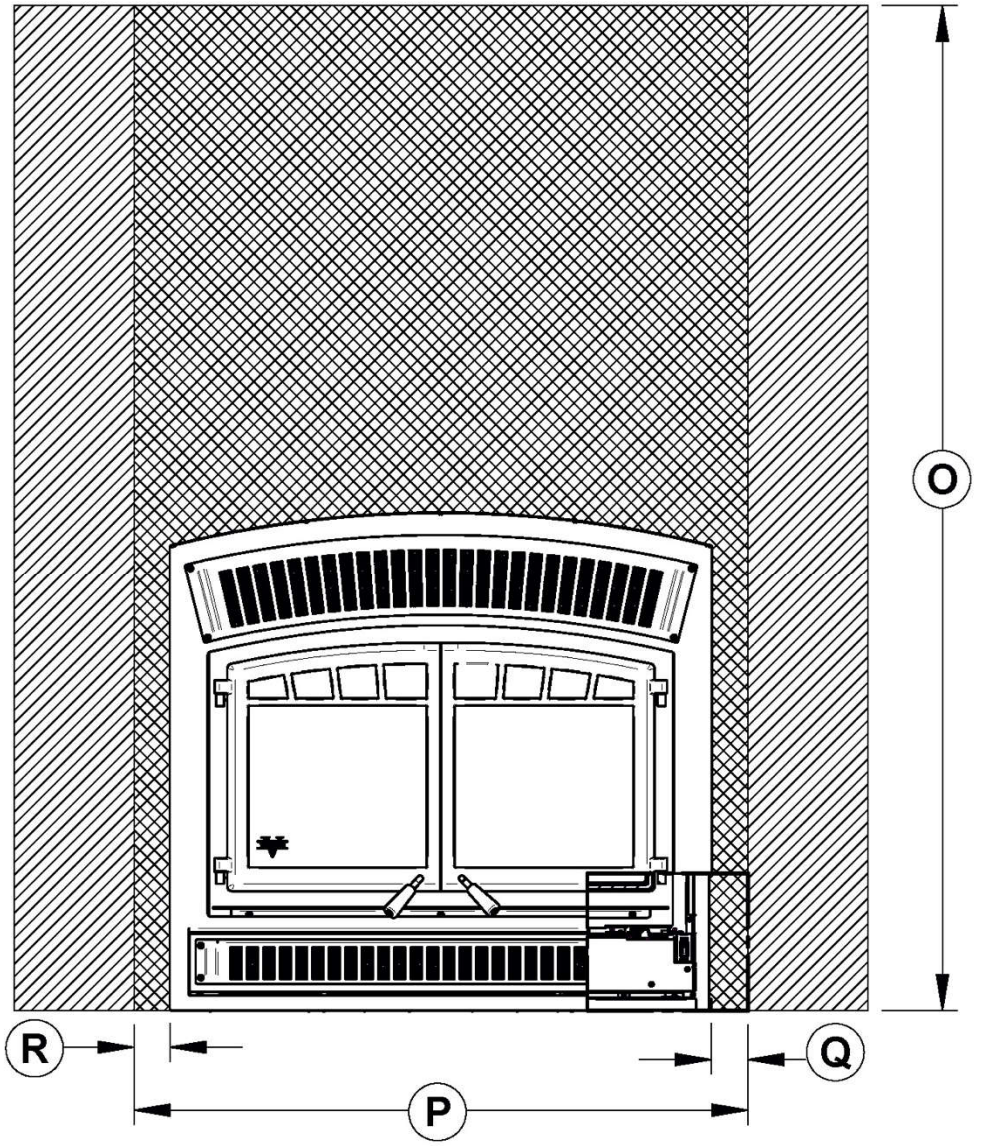

	MEASURMENTS
O	84" (2134mm)
P	50 3/4" (1289mm)
Q	3 1/16" (78 mm)
R	3" (76 mm)

LEGEND	
	Combustible material allowed in this area
	Non-combustible material only in this area

6.3.9 Installation of a non-combustible shelf

It is possible to install a shelf but it must be made of non combustible materials. It must be installed at least 52" from the base of the fireplace.

WARNING
THE SHELF WILL BE HOT. DO NOT PUT COMBUSTIBLE MATERIAL ON THE SHELF.

7 THE VENTING SYSTEM

7.1 General

The venting system, acts as the engine that drives your wood heating system. Even the best fireplace will not function safely and efficiently as intended if it is not connected to a suitable chimney.

The heat in the flue gases that pass from the fireplace into the chimney is not waste heat. This heat is what the chimney uses to make the draft that draws in combustion air, keeps smoke inside the fireplace and safely vents exhaust to outside. You can think of heat in the flue gas as the fuel the chimney uses to make draft.

7.2 Suitable Chimneys

Your wood fireplace will provide optimum efficiency and performance when connected to a 8-inch diameter chimney.

7.3 Minimum Chimney Height

The top of the chimney should be tall enough to be above the air turbulence caused when wind blows against the house and its roof. The chimney must extend at least 1 m (3 ft.) above the highest point of contact with the roof, and at least 60 cm (2 ft.) higher than any roof line or obstacle within a horizontal distance of 3 m (10 ft.).

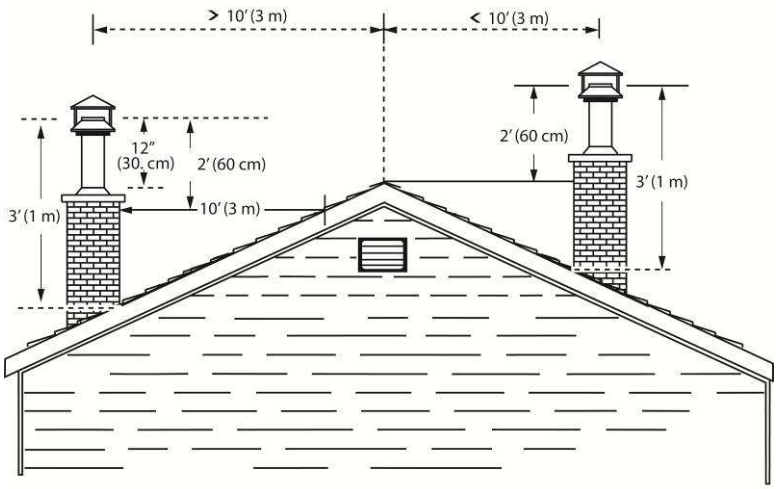

7.4 The Relationship Between the Chimney and the House

Because the venting system is the engine that drives the wood heating system, it must have the right characteristics. The signs of bad system design are cold backdrafting when there is no fire in the fireplace, slow kindling of new fires, and smoke roll-out when the door is opened for loading.

7.4.1 Why the chimney should penetrate the highest heated space

When it is cold outside, the warm air in the house is buoyant so it tends to rise. This tendency of warm air to rise creates a slight pressure difference in the house. Called 'stack effect', it produces a slightly negative pressure low in the house (relative to outside) and a slightly positive pressure zone high in the house. If there is no fire burning in a heater connected to a chimney that is shorter than the warm space inside the house, the slight negative pressure low in the house will compete against the desired upward flow in the chimney.

There are two reasons why the chimney in the house at right will cold backdraft when it is cold outside and there is no fire burning in the fireplace. First, the chimney runs up the outside of the house, so the air in it is colder and denser than the warm air in the house. And second, the chimney is shorter than the heated space of the house, meaning the negative pressure low in the house will pull outside air down the chimney, through the fireplace and into the room. Even the finest fireplace will not work well when connected to this chimney.

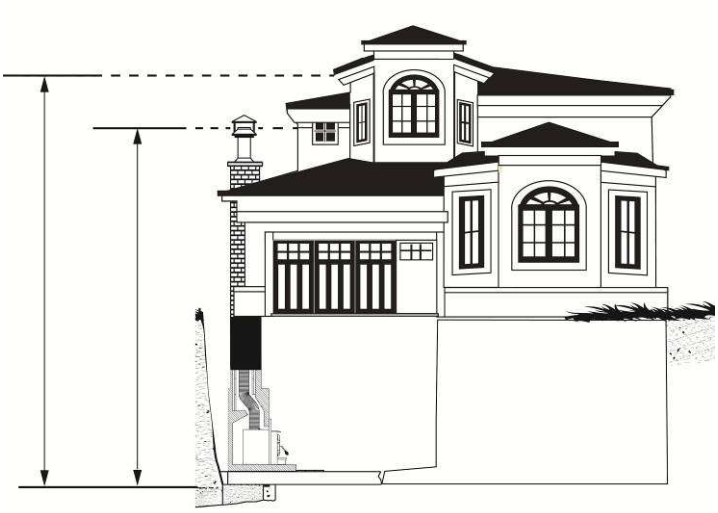

7.5 Chimney Installation Notes

- If possible, install an interior chimney as it will provide better performance. In areas with continuous temperatures below −18° C (0° F), the use of an exterior chimney increases the likelihood of operating problems such as low draft, high rate of creosoting, and poor start-up characteristics. Exterior chimneys are also prone to down-drafting and flow reversal. Installations, which are located on lower floors in the house, such as in a basement, in combination with outside chimney, are especially prone to flow reversal.
- The HE350 is listed only with chimney system described in Erreur ! Source du renvoi introuvable..
- A chimney venting a fireplace shall not vent any other appliance.
- The minimum chimney system height for a straight installation is 15 ft. (4,6 m) from the bottom of the fireplace to the top of the outside chimney.
- All chimney installations must include at least one support. Reducing the amount of chimney weight on the fireplace will help avoid the noise created when the fireplace expands. This can be achieved by having the chimney supported by the supports. The maximum chimney length that should be supported by the fireplace is 12 ft. (3.7 m) for 1" Solid Pack Chimney.
- The chimney must extend at least 3 ft. (92 cm) above its point of contact with the roof and at least 2 ft. (61 cm) higher than any wall, roof or building within 10 ft. (3.1 m) of it. See the figures on point 11 bellow to determine the configuration that applies to your roof (flat or sloped roof and the distance between the chimney and the highest point of the roof and/or the nearest chimney).
- Deviations should be avoided whenever possible, especially the most pronounced. Each deviation adds some restriction to the chimney system and may lead to draft problems.
- If the chimney extends higher than 5 ft. (1.5 m) above its point of contact with the roof, it must be secured using a roof brace.
- A rain cap must be installed on top of the chimney.
- Cut and frame square holes in all floors, ceilings, and roof that the chimney will go through to provide a 2" (50 mm) minimum clearance between the chimney and any combustible materials. Do not fill this 2″ space with insulation or any other combustible material.
- Portions of the chimney which may extend through accessible spaces must be enclosed to avoid contact with combustible materials or damage the chimney.

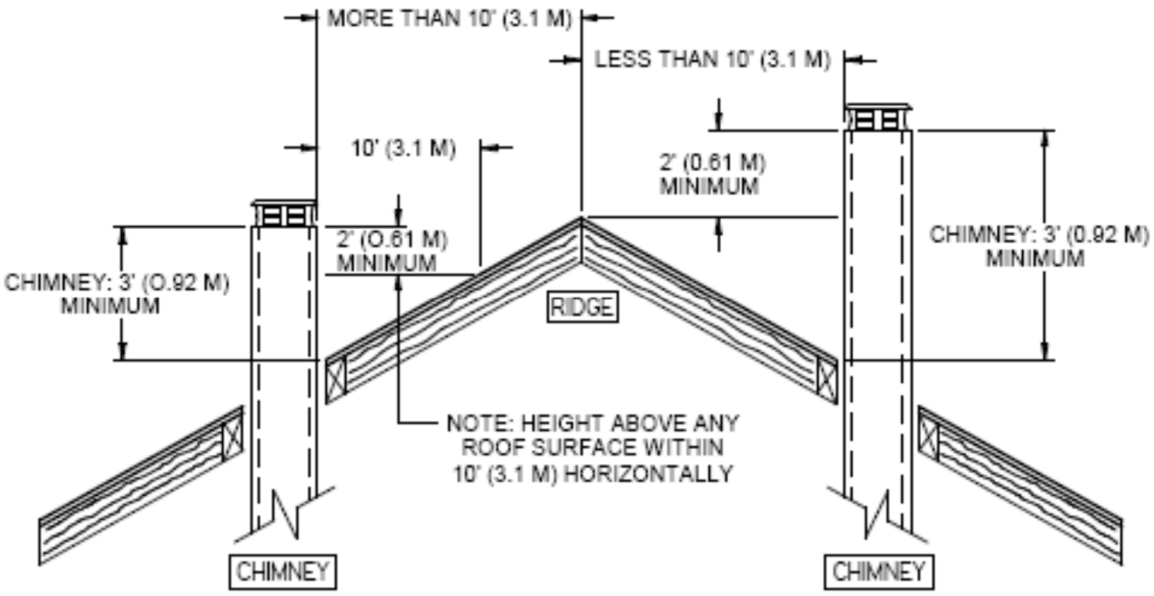
MORE THAN 10' (3.1 M)
LESS THAN 10' (3.1 M)
10' (3.1 M)
2' (0.61 M)
MINIMUM
2' (0.61 M)
MINIMUM
CHIMNEY: 3' (0.92 M)
MINIMUM
CHIMNEY: 3' (0.92 M)
MINIMUM
RIDGE
NOTE: HEIGHT ABOVE ANY
ROOF SURFACE WITHIN
10' (3.1 M) HORIZONTALLY
CHIMNEY
CHIMNEY

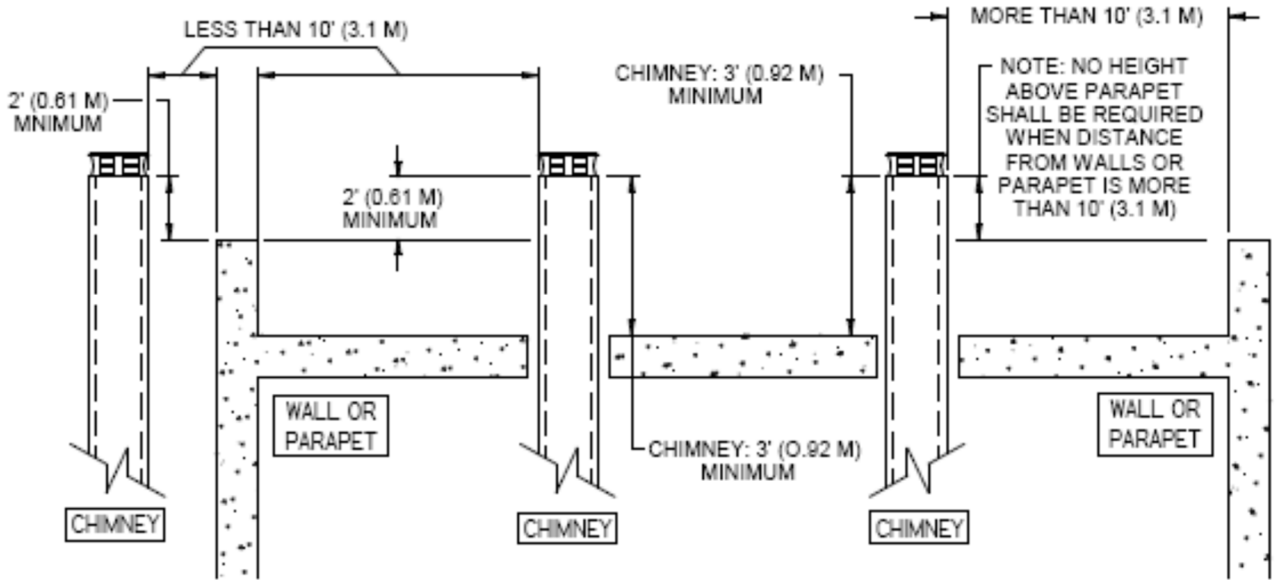
LESS THAN 10' (3.1 M)
2' (0.61 M)
MNIMUM
2' (0.61 M)
MINIMUM
CHIMNEY: 3' (0.92 M)
MINIMUM
MORE THAN 10' (3.1 M)
NOTE: NO HEIGHT
ABOVE PARAPET
SHALL BE REQUIRED
WHEN DISTANCE
FROM WALLS OR
PARAPET IS MORE
THAN 10' (3.1 M)
WALL OR
PARAPET
CHIMNEY: 3' (0.92 M)
MINIMUM
WALL OR
PARAPET
CHIMNEY
CHIMNEY
CHIMNEY

- For installations where more than one chimney is located in the same non-chase or within the same area, we suggest that their terminations be separated by at least 16" (410 mm) horizontally, and 18" (460 mm) vertically. This separation is to prevent smoke migrating from one chimney to another.

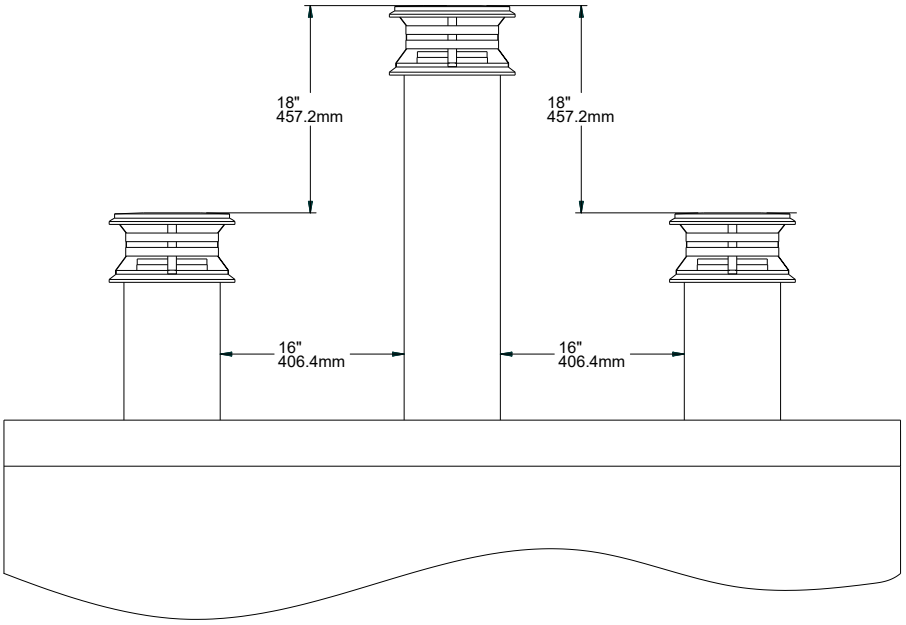

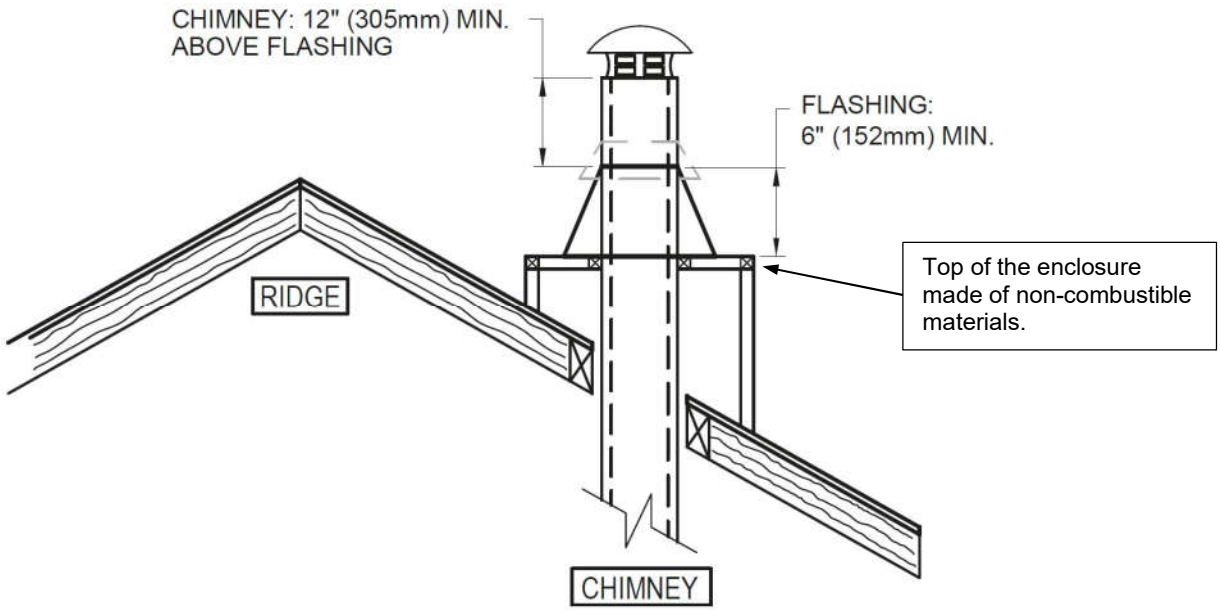

<u>Note</u>: The chimney chase on the roof must be the same size as the flashing.

<u>WARNING</u>: IF THE CHIMNEY IS INSTALLED IN AN ENCLOSURE ABOVE THE ROOF, IT MUST EXCEED THE TOP OF THE FLASHING CONE BY AT LEAST 12 INCHES (30 CM). THE FLASHING MUST HAVE A MINIMUM HEIGHT OF 6 INCHES (15.25CM). THE TOP OF THE ENCLOSURE MUST BE MADE OF NON-COMBUSTIBLE MATERIALS.

7.6 Chimney Installation Instructions

Always refer to the chimney manufacturer's Installation manual to ensure a safe installation. Some non-illustrated parts may be required.

7.6.1 Figures of Typical Chimney Installation

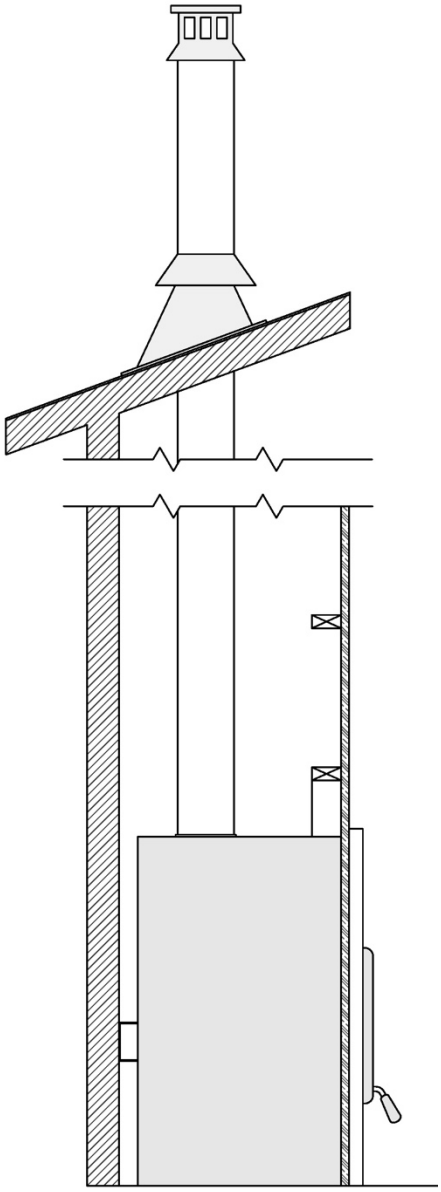

Direct installation

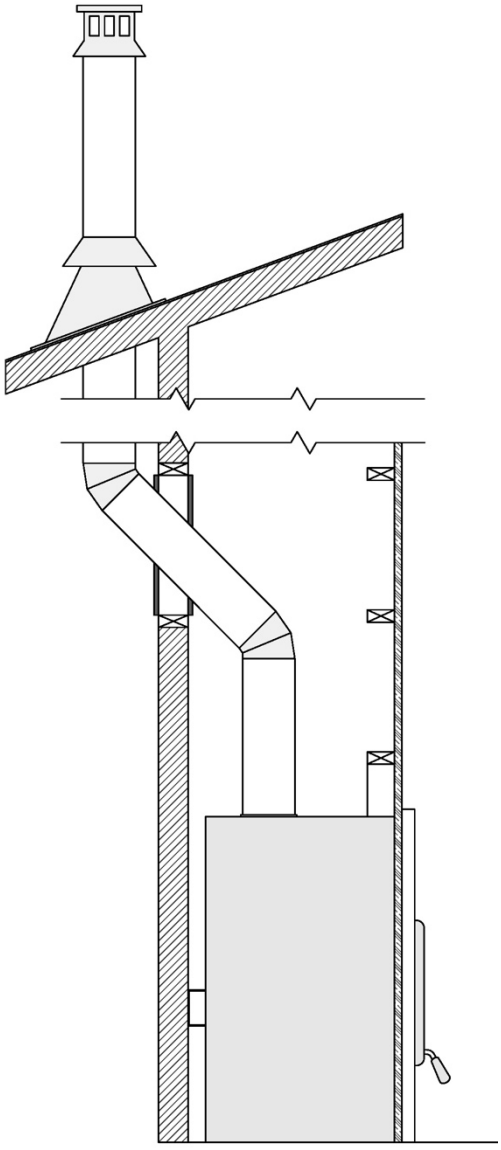

Exterior offset installation

7.6.2 Exterior offset installation

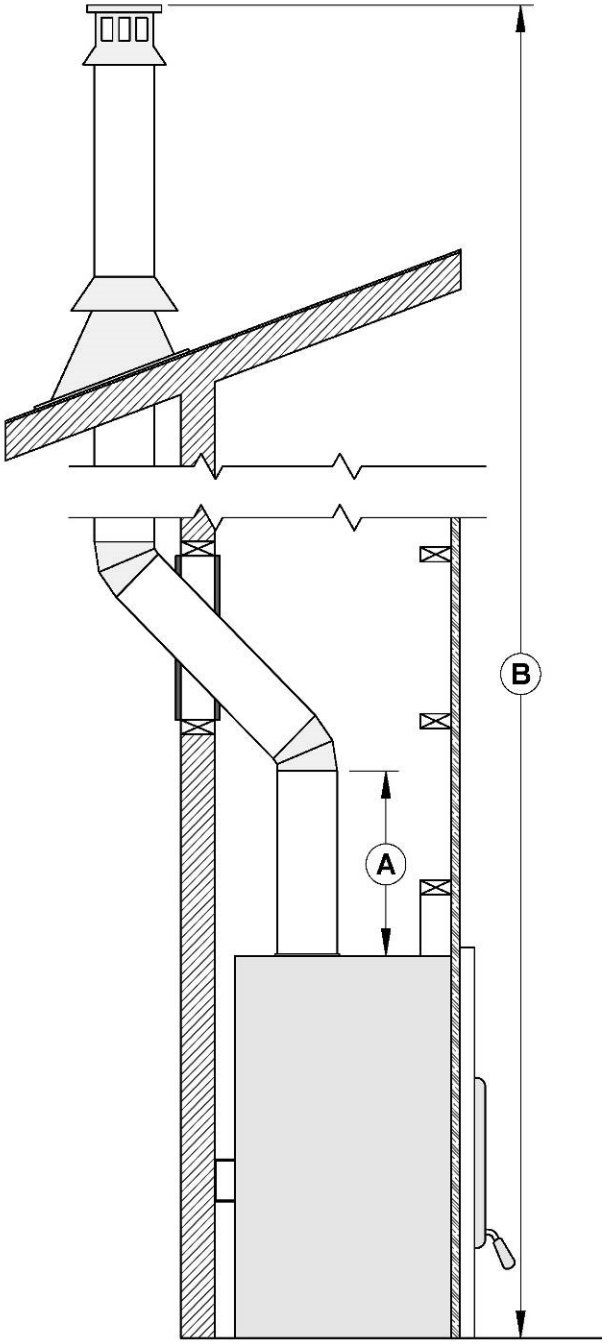

A	To insure a good draft, it is recommended to have a length of 18 inches from the top of the unit to the first offset. However, starting using a 30° or 45° elbow is also approved.
B	Mandatory measure of 15 ft. from the bottom of the fireplace to the top of the outside chimney.

7.6.3 Installation Instructions

WARNING

- **THE STRUCTURAL INTEGRITY OF THE FLOOR, WALL, AND CEILING/ROOF MUST BE MAINTAINED.**
- **THE FLOOR AND WALLS BELOW THE ATTIC MUST BE INSULATED USING THE SAME INSULATION.**

1. Cut and frame the holes in the ceiling, floor and roof where the chimney will pass. Use a plumb bob to line up the center of the holes. Make sure that the size of the floor and ceiling holes are in accordance with the chimney manufacturer's instructions.

2. From below, install a firestop **(B)** in each ceiling/floor separation through which the chimney will pass. At the attic level, install an attic radiation shield from above **(D).**

3. Follow the chimney's manufacturers' instructions and place the first chimney length on the fireplace. For all chimneys, you must use an anchor plate **(A)** before installing the first chimney length. Continue installing chimney lengths making sure to lock each length in place.

4. Cut and frame square holes in all floors, ceilings, and roof that the chimney will go through **(C)** to provide a 2" (50 mm) minimum clearance between the chimney and any combustible materials. Do not fill this space with insulation or any other combustible material.

5. Every time the chimney passes through a ceiling or a wall, install the appropriate firestop **(B)**. When you reach the desired height, install the roof support (not shown). (Refer to instructions included with the support).

6. Then, put the roof flashing **(E)** in place and seal the joint between the roof and the flashing with roofing pitch. For sloping roofs, place the flashing under the upper shingles and on top of the lower shingles. Nail the flashing to the roof, using roofing nails.

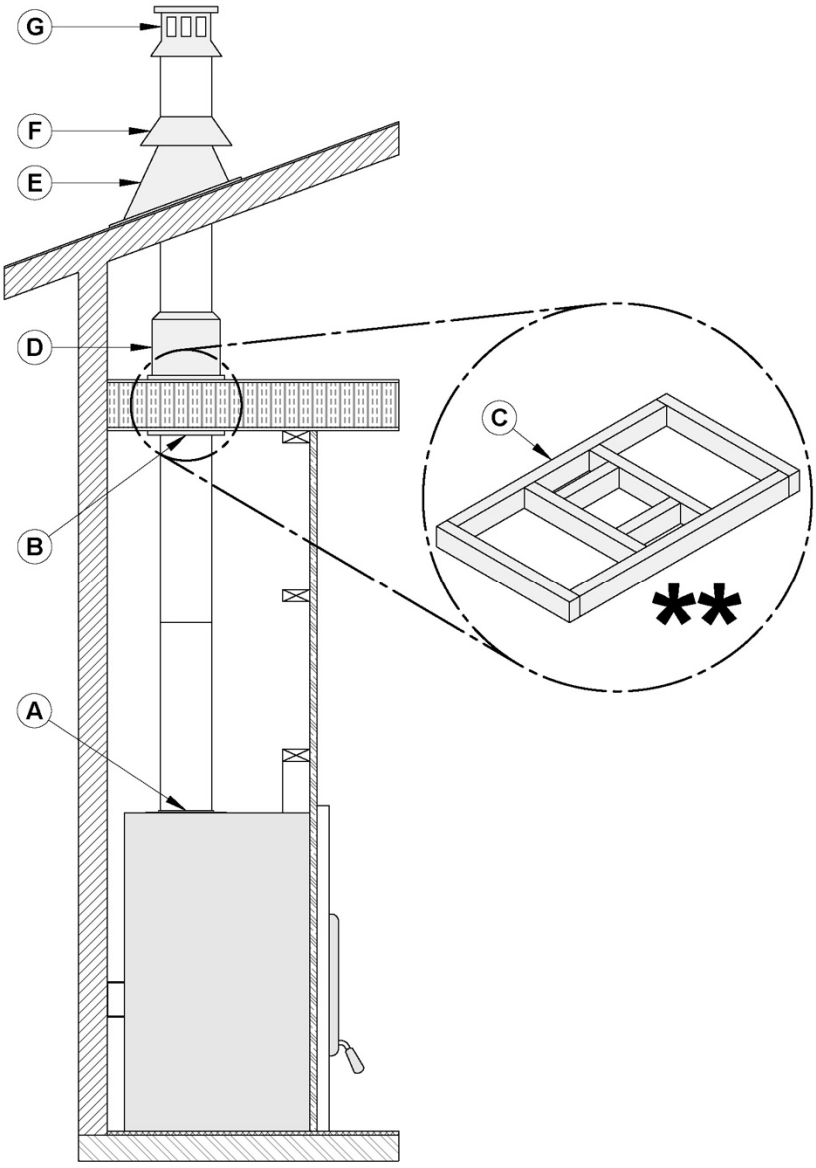

7. Place the storm collar **(F)** over the flashing, and tighten it with the bolt supplied. Finally, seal the joint between the storm collar and the chimney, using silicone caulking.

8. Install the chimney cap **(G)**.

9. When a ventilated roof flashing is installed, precautions are to be taken not to caulk or seal the ventilating openings.

7.6.4 Offset Chimney Installation

Table 2 : MINIMUM SYSTEM HEIGHT WHEN USING OFFSETS

Fireplace model	HE350
Chimney model	Ventis
Vertical installation	15 ft. (4.6 m)
Two (2) offsets	15 ft. (4.6 m)
Four (4) offsets	17 ft. (5.2 m)

After reaching the location **requiring the elbow, proceed as follows**:

1. To insure a good draft, it is recommended, to have a length of 18 inches (457 mm) from the top of the unit to the first offset. Install the first elbow; turn it in the required direction. Secure it to the chimney according to the chimney manufacturer's instructions. In many cases, it is recommended to secure connections with three (3) ½" (12 mm) metal screws.
2. Install the necessary chimney lengths to achieve the required offset. Lock the chimney lengths together according to the chimney manufacturer's instructions. In many cases, it is recommended to use three (3) ½" (12 mm) metal screws. If the offset length is made of two (2) chimney lengths or more, many chimney manufacturers may require that you use an offset or roof support halfway up the offset. If penetrating a wall, install a wall radiation shield supplied by the chimney manufacturer. (See section **7.6 - Chimney Installation Instructions**).
3. Use another elbow to turn the chimney vertically. Secure the elbow.
4. Use a plumb bob to line up the centre of the hole. Cut a hole for the chimney in the ceiling/floor. Frame this hole as described previously.
5. From below, install a firestop supplied by the chimney manufacturer.
6. A support must be used on the first 15' section (4.6 m).
7. Continue with the regular installation.

Table 3: LISTED CHIMNEYS FOR YOUR HE350

CHIMNEY MANUFACTURERS	BRAND	TYPE	INNER DIAMETER
Olympia Chimney / SBI Venting Division	Ventis	1” Solid Pack	8" (20 cm)
SBI Venting Division	Nexvent	1" Solid Pack	8" (20 cm)
Olympia Chimney	Champion Chimney System	1" Solid Pack	8" (20 cm)
Olympia Chimney	Rockford Chimney Systems	1" Solid Pack	8" (20 cm)
DuraVent	DuraTech	1" Solid Pack	8" (20 cm)
DuraVent	DuraTech Canada (DTC)	1" Solid Pack	8" (20 cm)
DuraVent	DuraPlus HTC	2" Solid Pack	8" (20 cm)
DuraVent	DuraTech Premium	2" Solid Pack	8" (20 cm)
DuraVent	DuraPlus	AC Triple Wall	8" (20 cm)

WARNING

THE CHIMNEY MUST START WITH AN 8'' DIAMETER ANCHOR PLATE SECURED TO THE FIREPLACE.

Table 3: LIST OF MANDATORY COMPONENTS

CHIMNEY MANUFACTURER	MANDATORY COMPONENTS	TYPE/BRAND
Olympia Chimney	• Ventilated roof flashing. • Rafter protector* at the roof level if chimney is enclosed at the attic level.	1" Solid Pack

*You can get a kit of four (4) rafter protector (AC03510) from your dealer. Each rafter is made of 22GA galvanized steel (10.44”W x 5.126”H).

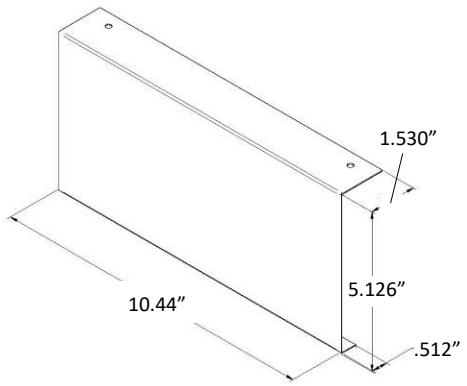

7.7 Angled Wall Radiation Shield

When passing through a combustible wall with the chimney at a 30° or 45° angle (30° or 45° in Canada and 30° only in the USA), an angled firestop or wall radiation shield provided by the chimney manufacturer must be installed. Only one is required. Follow the chimney manufacturer's installation instructions.

In cold climate locations, it is recommended that you use the insulated wall radiation shield since it will maintain the home's thermal barrier.

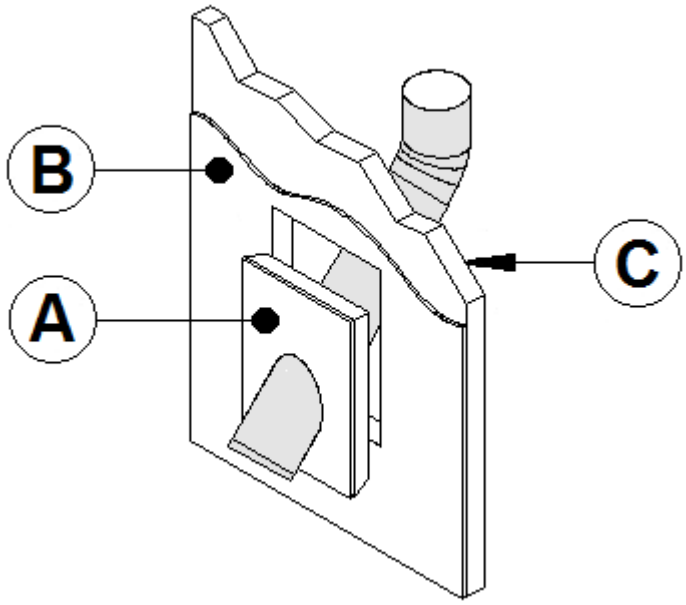

A	INSULATED WALL RADIATION SHIELD
B	GYPROCK
C	INSULATED WALL

7.8 Chimney Support Installation

7.8.1 Universal Roof Support

This support has three possible uses:

1. It must be used on a roof to support the chimney.
2. It may be used on a floor, ceiling or roof above an offset to support the chimney above the offset.
3. It may be used on a floor, ceiling or roof as a supplementary support.

For roof support installation, refer to the instructions provided with the support by the chimney manufacturer. Many manufacturers will provide the maximum height of chimney that can be supported by the support. Make sure you respect those parameters.

7.8.2 Universal Offset Support

This support is used to support the chimney above an offset. When the chimney offset is used to pass through a wall, this support may be used on the wall to support the chimney. For offset support installation, refer to the instructions provided with the support by the chimney manufacturer. Many manufacturers will provide the maximum height of chimney that can be supported by the support. Make sure you respect those parameters.

7.9 Supply of Combustion Air

Legally, it is not mandatory to connect your fireplace to a fresh air intake unless it is required by the local code or the manufacturer. However, if you want to meet the Novo Climate or R2000 requirements, an external air intake will be required. The fresh air intake promotes proper combustion and prevents the risk of house depressurization. Although the external air supply is not a guarantee against the risk of smoke return caused by house depressurization, it will certainly minimize the risk.

NOTE

- **IT IS STRONGLY RECOMMENDED TO INSTALL A MECHANICAL DAMPER TO CLOSE THE FRESH AIR INTAKE WHEN THE FIREPLACE IS NOT IN USE.**
- **IT IS STRONGLY RECOMMENDED TO INSTALL A CARBON MONOXIDE (CO) DETECTOR/ALARM IN THE ROOM WHERE THE FIREPLACE IS INSTALLED. THE CO DETECTOR WILL WARN YOU IF, FOR ANY REASON, THE WOOD FIREPLACE FAILS TO FUNCTION CORRECTLY.**

The easiest and most reliable supply of combustion air for your wood fireplace is from the room in which it is installed. The room air is already preheated so it will not cool the fire and its availability is not affected by the pressure of the wind on the house. However, the combustion of wood requires a large volume of air. It will take only a few hours to consume the equivalent of the entire volume of air contained inside your home. This air will be replaced by new cold air from outside either through tiny cracks in your home or via your air exchanger. It is strongly recommended to install an external air intake to increase your heating efficiency and to avoid consuming the preheated air you already paid for.

Some states or counties require that fireplace are connected to a fresh air intake. If you install a fresh air intake on an external wall, its pressure may vary in windy conditions. It would be therefore preferable not to install the air intake on a heavily windward wall. If you experience difficulties with your fireplace and you suspect strong winds as the source of the problem, a mechanical damper with help you diagnose and solve the problem. Check the outdoor air duct for soot deposits when the venting system is cleaned and inspected.

APPENDIX 1 - HOT AIR CIRCULATION GRILLE – MODERN STYLE (AC01378)

It is possible to connect a hot air circulation grille kit in the fireplace facing. This kit allows distributing heat to the room using natural convection. For the complete installation procedure, see the installation manual provided with the kit. You can also download this manual on the website.

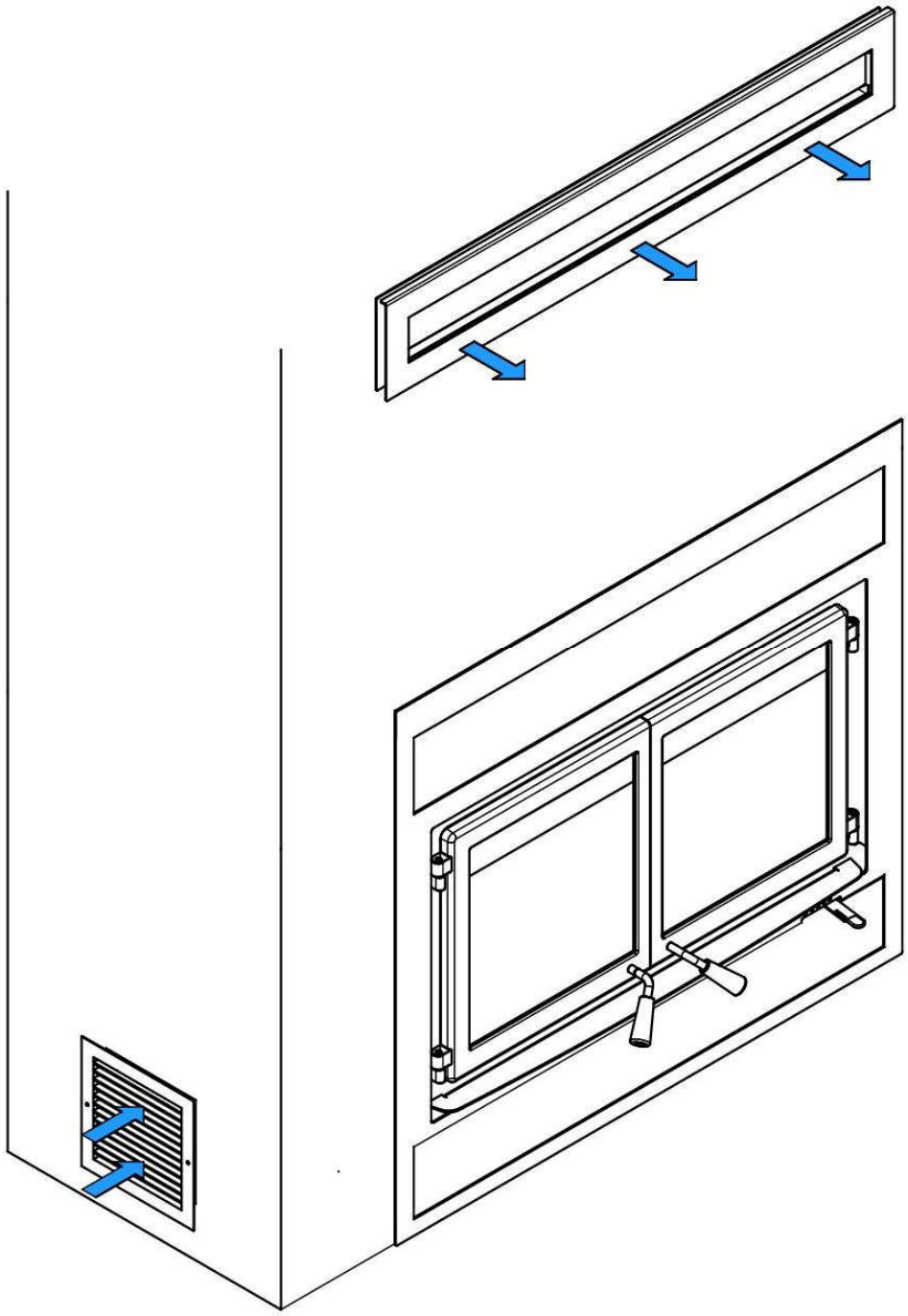

APPENDIX 2 - FORCED AIR DISTRIBUTION KIT* (VA4460)

It is possible to connect a forced air distribution kit on either side of the HE350.

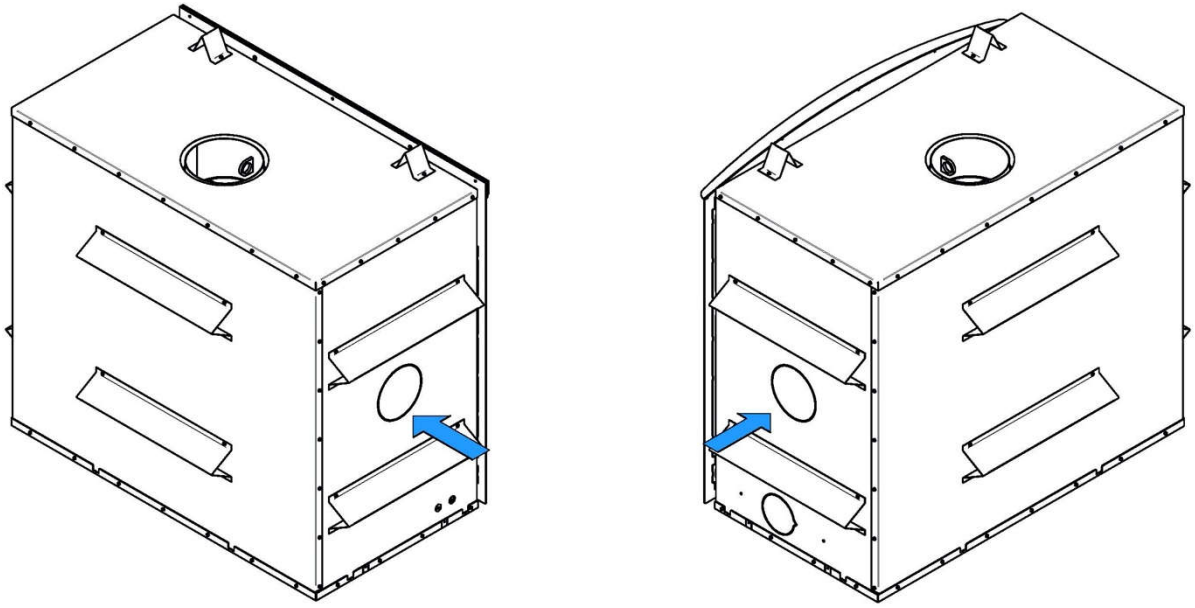

This kit allows distributing heat to another room up to 50 feet (15 m) of the fireplace. The insulated flexible pipe (not included in the kit) must be HVAC type pipe and must comply with ULC S110 and/or UL 181, Class 0 or Class 1 Standards and must withstand temperatures up to 250 °F.

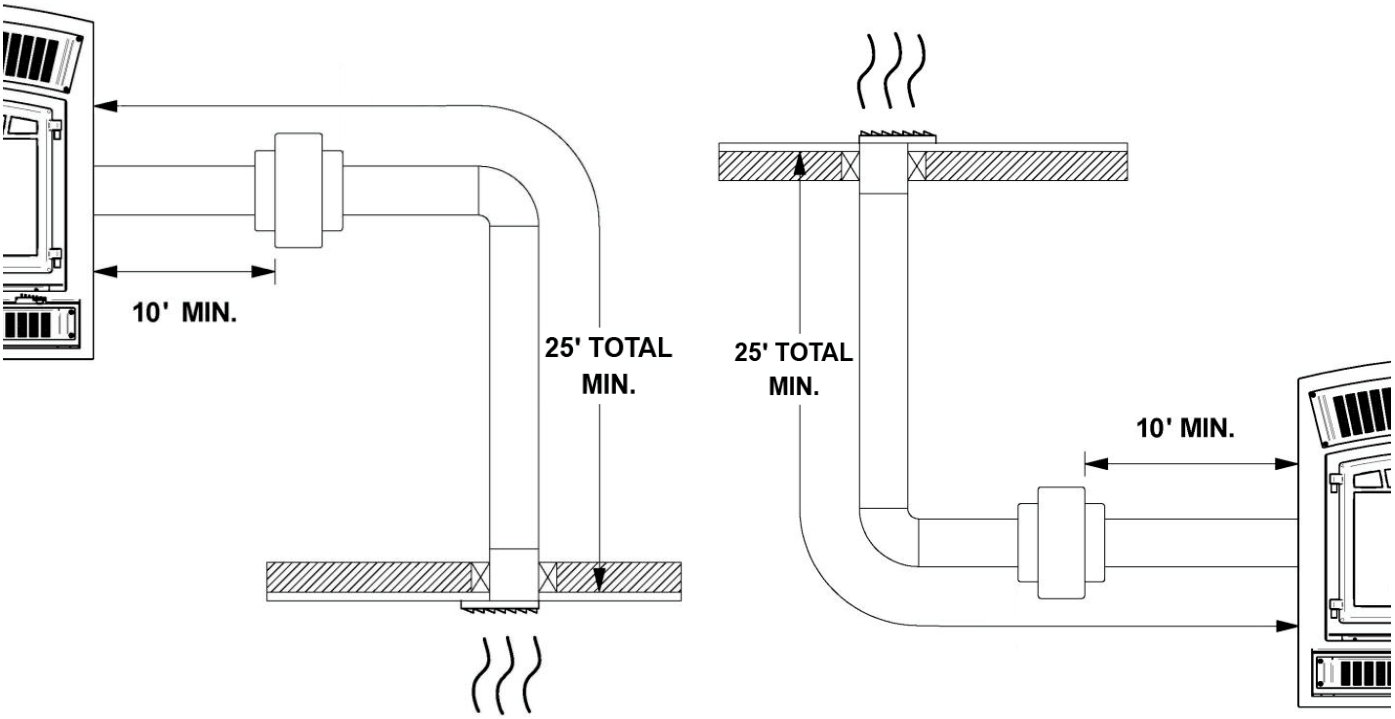

**The EPA standard states that it is necessary to perform certification testing with any ventilation that is likely to alter the units' performance. For this reason, SBI has tested the effects of the forced air kit on the emissions of fine particles. Due to the design of our appliance and more specifically to the temperature sensor that is installed to control stops and starts, the forced ait kit does not affect the emission results. In fact, this option promotes the recovery of excess heat to later redistribute it to other rooms. During our testing, it was noted that the convection blowers underneath the firebox had more of an effect on the fine particles emission due to the air being directed onto the firebox thus cooling the unit. However, this appliance has already been tested for emission with one or more convection blowers. In conclusion, we have satisfied the environmental requirements efficiently.*

WARNING

- **IN CANADA, THE TERMINATION GRILL MUST BE INSTALLED AT LEAST 59" (150 CM) FROM THE FLOOR (B).**
- **A 1" CLEARANCE TO COMBUSTIBLE MATERIALS (A) MUST BE LEFT AROUND THE TERMINATION GRILL.**

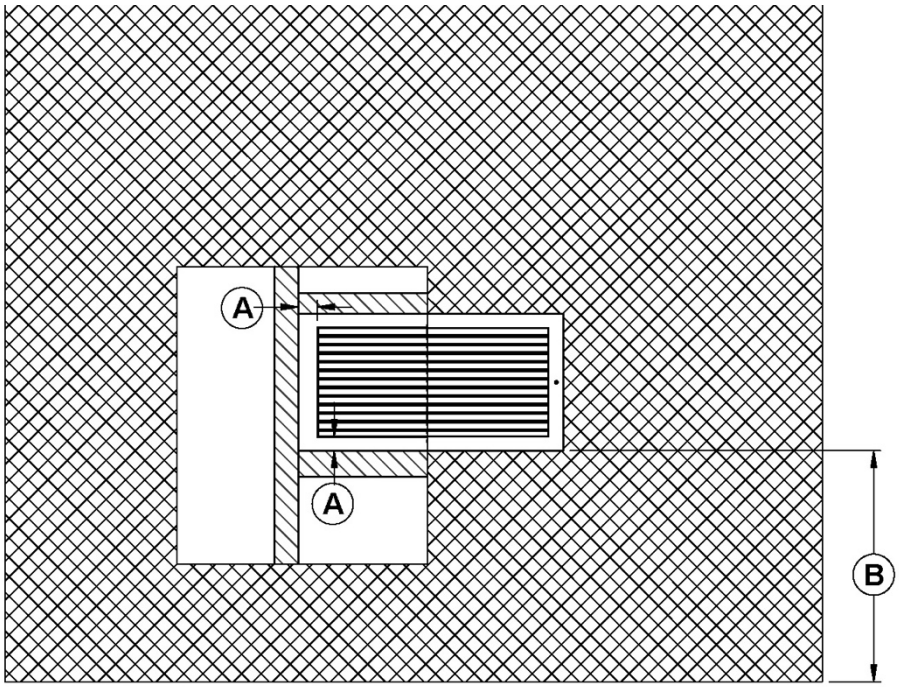

For the complete installation procedure, see the installation manual provided with the kit. You can also download this manual on the web site.

APPENDIX 3 - BLOWER MAINTENANCE OR REPLACEMENT

1. Open the bottom louver **(A)**.

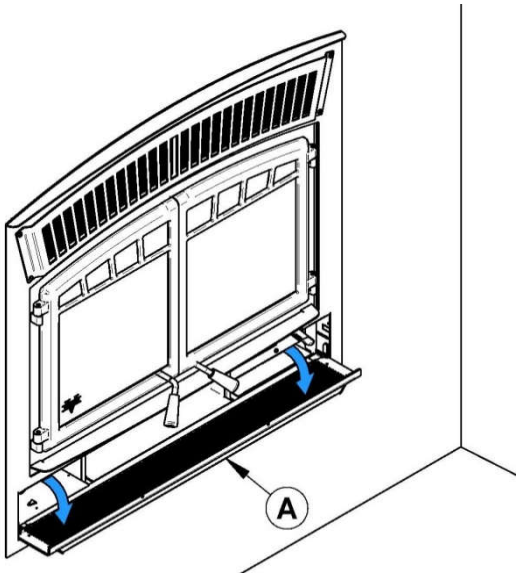

2. With a short square head screwdriver, remove the 4 screws **(C)** holding in place the heat shield **(B)**.

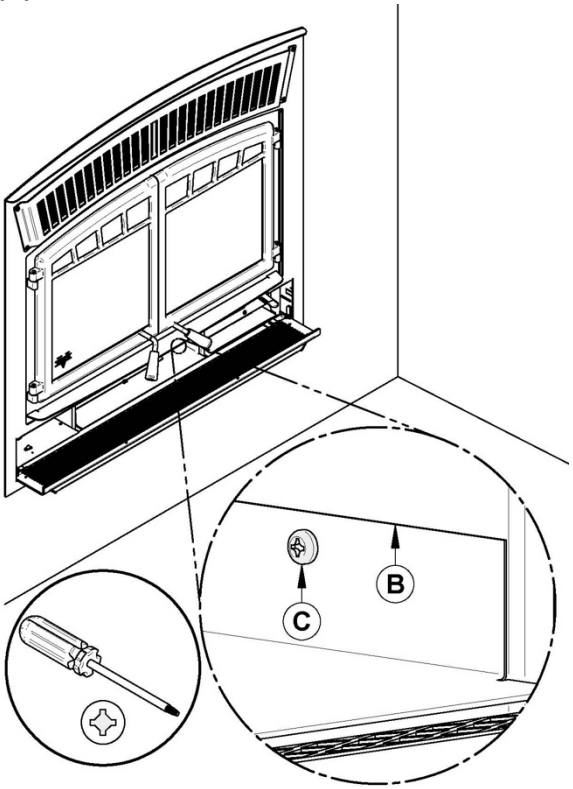

3. Remove and keep the heat shield **(B)** and the screws **(C)**.

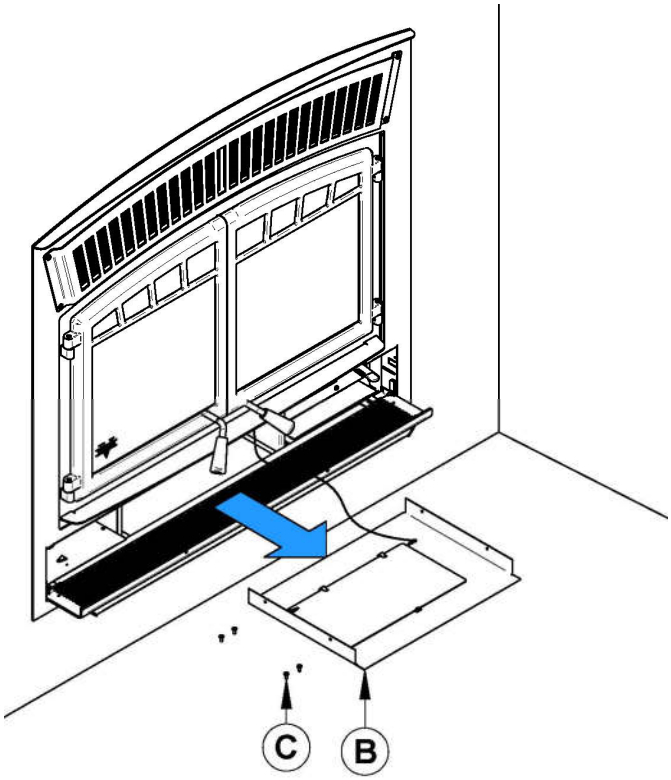

4 4. Cut the Tie wrap **(D)**

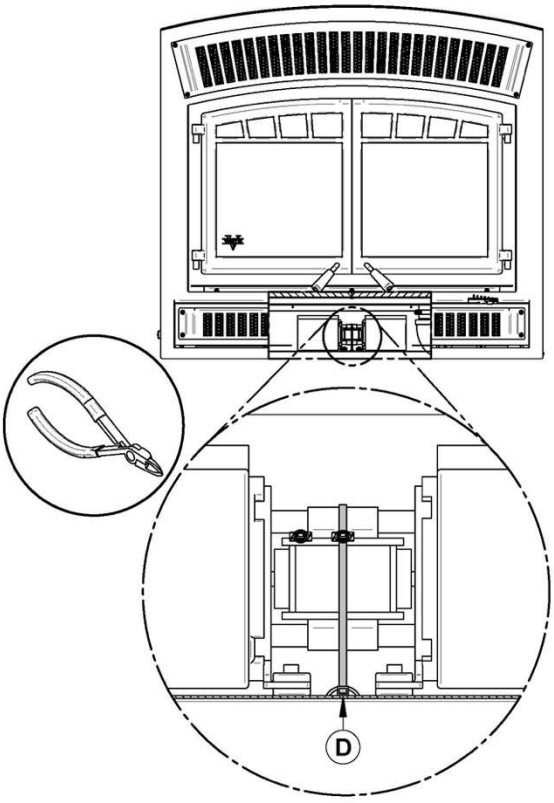

5. Unplug the blower's electric wires **(F)** and **(G)**.
6. Lift the blower **(E)** located under the firebox towards the back.
7. Turn 90° to pull out.

Repeat the steps in reverse order to reinstall the blower.

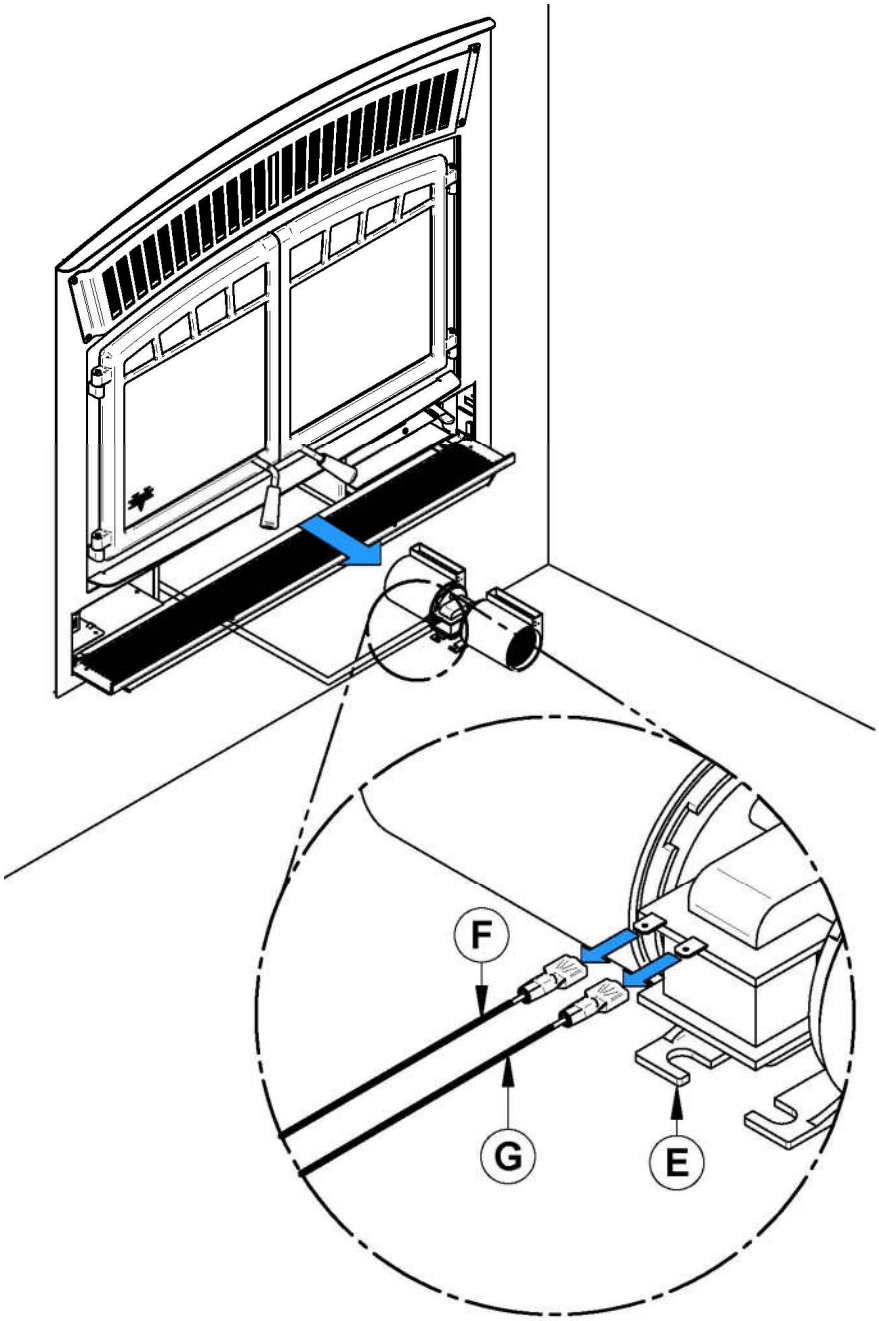

APPENDIX 4 - INSTALLING THE FRESH AIR INTAKE KIT

During operation, the fireplace requires fresh air for combustion and draws air out of the house. It may starve other fuel burning appliances such as gas or oil furnaces. As well, exhaust blowers may compete for air, causing negative pressure in the house, resulting in smoke entering the house from the fireplace. This situation is aggravated in modern airtight houses. To overcome this problem, we strongly recommend that you bring fresh air to the fireplace. **Check with local authorities having jurisdiction in your area, it may be mandatory.**

Fresh air intake kit installation

Follow these instructions to install a fresh air intake kit

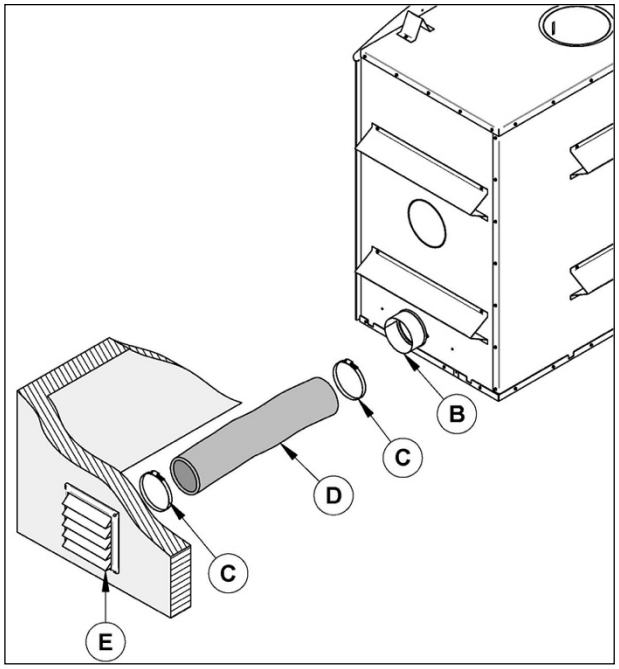

- The insulated flexible pipe length **(D)** should be sufficient and have a configuration to avoid condensation.
- The outside wall termination **(E)** must not be installed:
    - At more than 50% of the total height of the chimney;
    - At more than 10 ft. (3 m) above the base of the fireplace;
    - At more than 3 ft. Below the base of the fireplace;
- The fresh air must come from outside the house. The air intake must not draw air from the attic, from the basement, or from a garage.
- The outside wall termination should be installed where it is not likely to be blocked by snow or exposed to extreme wind and away from automobile exhaust fumes, gas meter and other vents.
- The insulated flexible pipe and the outside wall termination can be installed over or under the floor level.
- The fresh air intake kit included with the fireplace contains the following components:
    - One (1) 5" adaptor;
    - One (1) air inlet block-off plate;
    - Four (4) screws.
- The following components are not included:
    - A 5” insulated flexible pipe **(D)** (This HVAC type pipe must comply to ULC S110 and/or UL 181, Class 0 or Class 1 Standards and must withstand temperatures up to 250 °F.
    - The outside wall termination **(E)**.
    - Adjustable clamps (2X) **(C).**

Note: Only remove the knock-out that will be connected to the fresh air inlet.

The fresh air intake kit may be installed on two different places on the fireplace.

1- On the right side of the appliance (most common).
2- On the right side under the appliance.

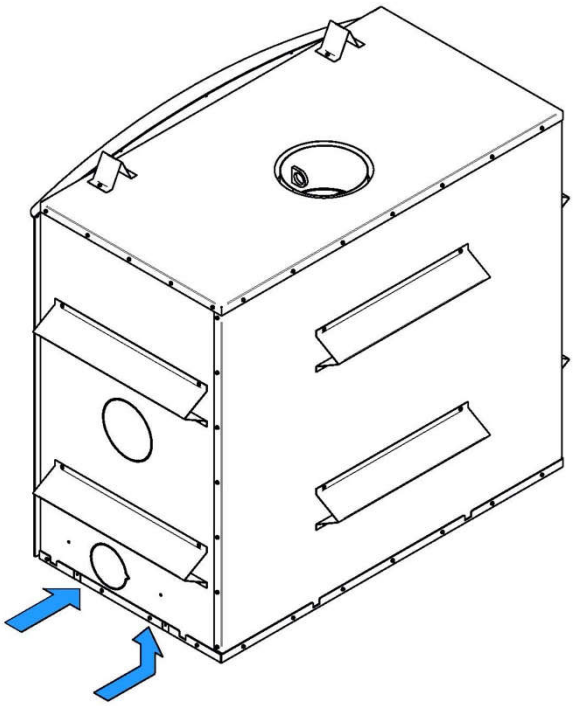

1. Remove the knock out located on the right-hand side of your fireplace.

2. Install the 5" adapter included in your fireplace. Align the notch on the adaptor with the one on the fireplace and turn clockwise.

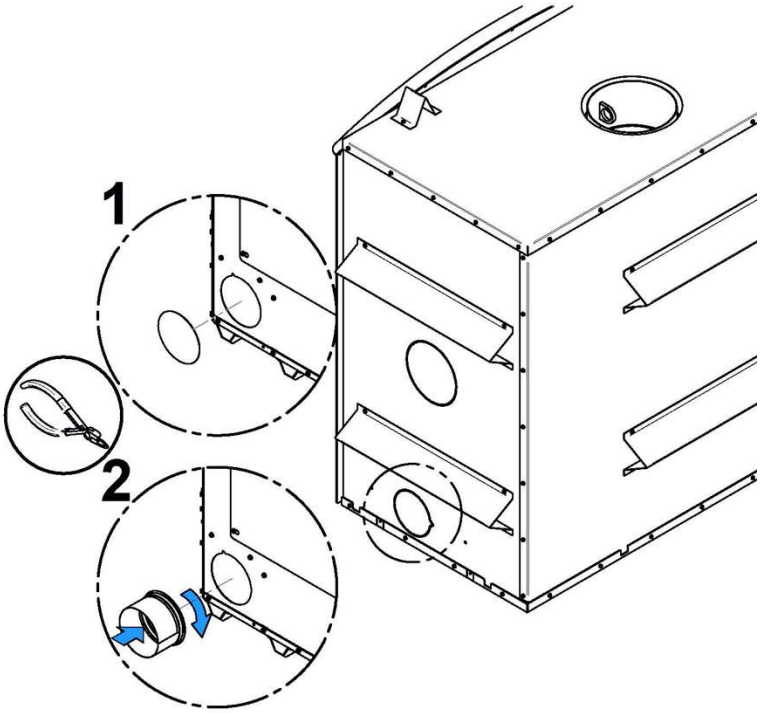

3. Flip the fireplace lower decorative louver. Install the blocking plate **(F)** included with the fireplace, on the front opening of the air control housing. Using a screwdriver, secure with four screws located in the user's manual.

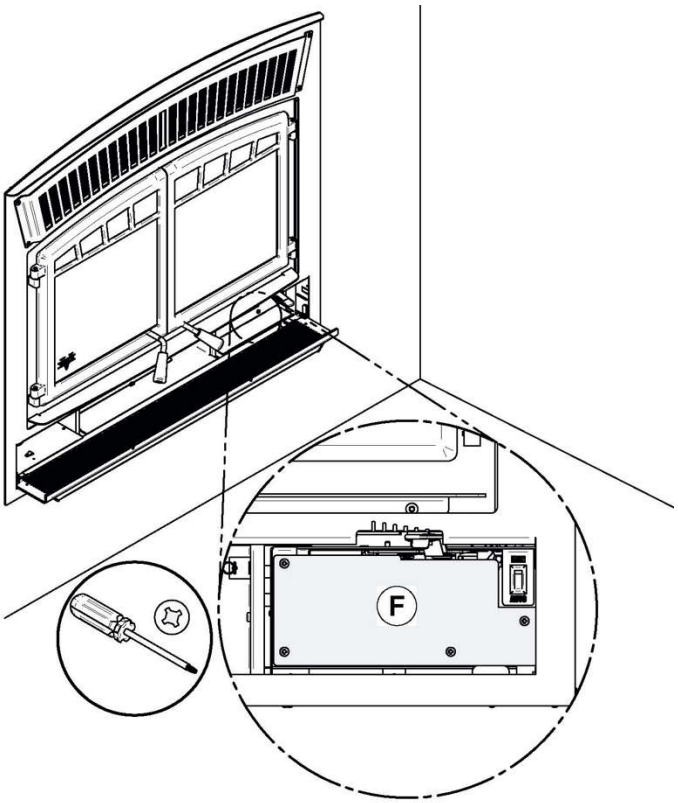

Then, install the flexible pipe* **(D)** (not supplied) to the fresh air intake adapter **(B)** using one of the adjustable pipe clamps **(C)**. Secure the other end of the pipe to the outside wall termination **(E)** using the second adjustable pipe clamp **(C)**. The outside wall termination **(E)** must be installed outside of the building.

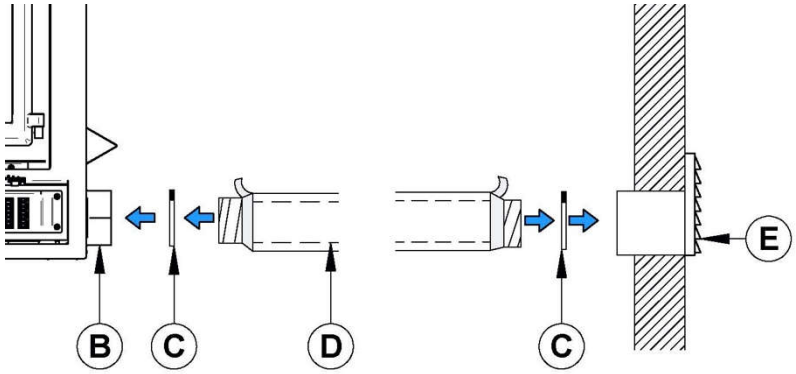

*For a pipe length less than 20 ft, use a 5″ pipe diameter. For a pipe length of more than 20ft, or having more than two deviations, use a 6″ pipe diameter. The maximum pipe length is 30 ft (9 m).

WARNING

TO AVOID CONDENSATION AND RUST IN YOUR FIREPLACE, IT IS RECOMMENDED TO USE AN INSULATED PIPE LONG ENOUGH (MINIMUM 10FT) AND CONTAINING A "P-TRAP".

This configuration can be found inside the chase, but must at all times maintain clearances to combustibles. The following figure is shown as an example.

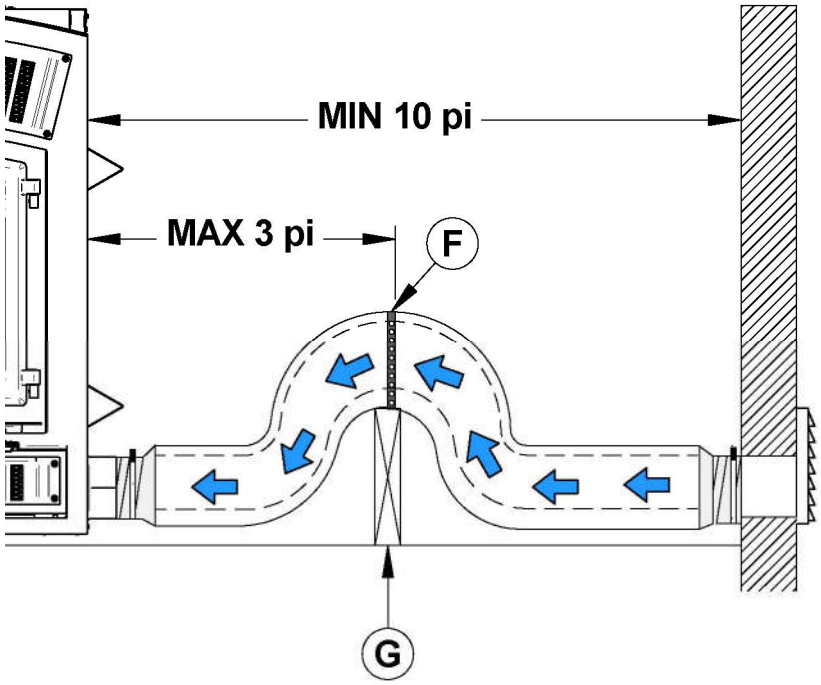

To complete the installation, make a hole of 1/4" to 1/2" (6 mm à 13 mm) bigger than the insulate pipe diameter in the outside wall of the house at the chosen location. From outside, place the outside wall termination **(E)** in the hole (open side down) and fasten the register to the wall, with screws.

Place the insulated pipe over the wall termination tube and over the fireplace outside air connector. At each end, carefully pull back the insulation and plastic cover, exposing the flexible pipe. Attach the flexible pipe using pipe clamps. For a better seal, you may also use aluminum tape. Wrap the tape around the joint between the flexible pipe and the air inlets. Carefully push the insulation and plastic cover back over the pipe. Fix the plastic in place using aluminum tape.

APPENDIX 5 - REFRACTORY SLABS REPLACEMENT

The intense heat of the fire will normally cause hairline cracks in the refractory slabs. These cracks can be minimized by proper curing as described in “First Fires”. They will not normally diminish the effectiveness of the refractory slabs. If large cracks develop, then the refractory slabs should be replaced. To replace the refractory slabs, follow these steps:

1- Remove the inner ash retainer and the floor refractory slabs **(A & B)**.

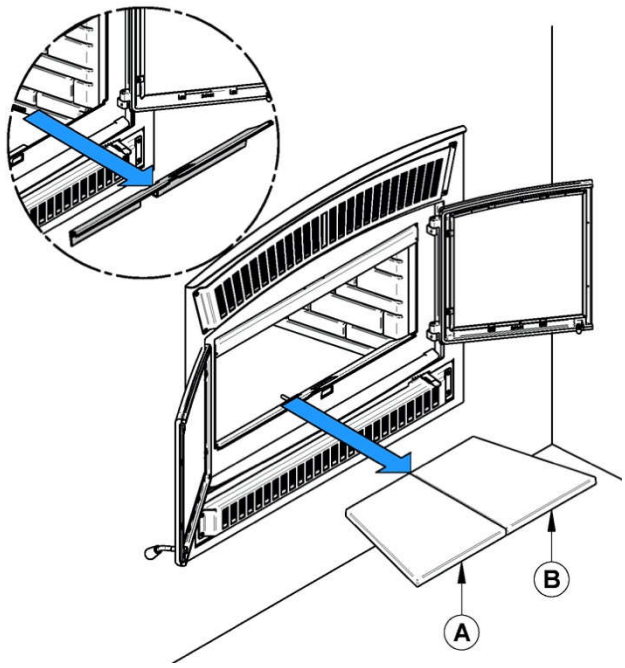

2- Using a power screwdriver and hex tip 5/16", remove the slab holders **(D)** and the left and right refractory slabs **(C).**

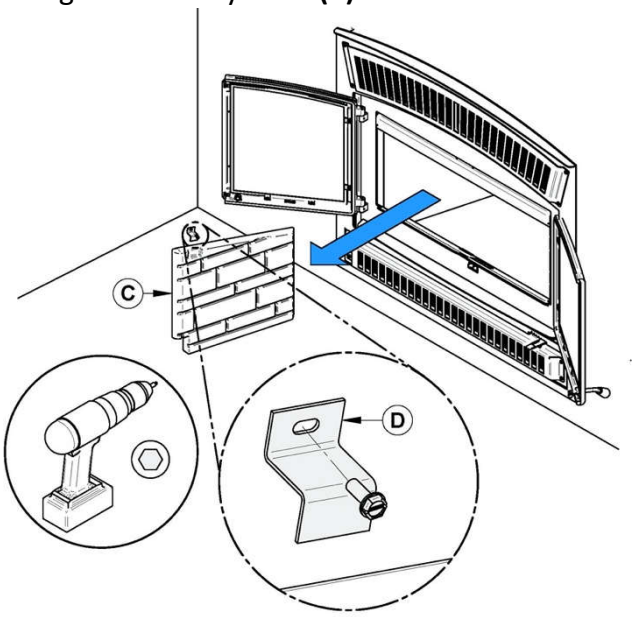

3- Remove the rear refractory slab **(E)**.

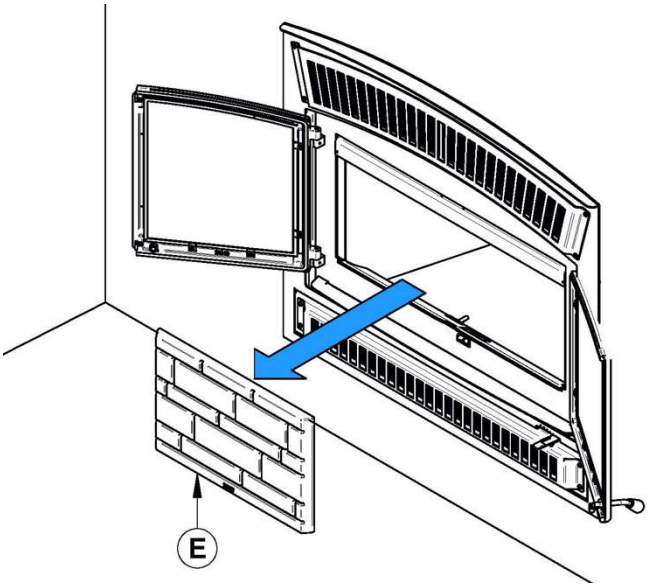

To install new refractory slabs, follow the above steps in reverse.

APPENDIX 6 - INSTALLATION OF SECONDARY AIR TUBES AND BAFFLE

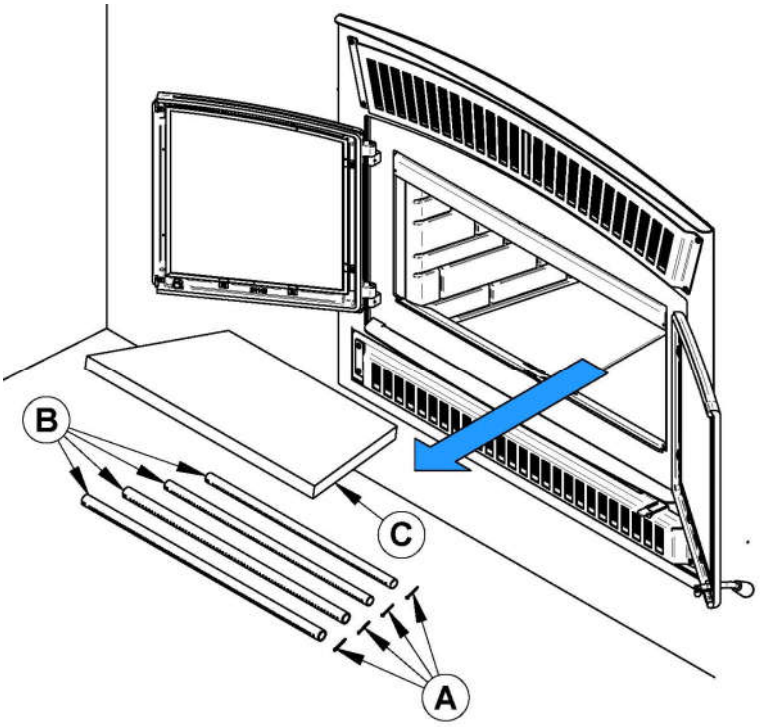

REMOVABLE PARTS	
A	Cotter pins **(x4)**
B	Air tubes **(x4)**
C	C-Cast baffle **(x1)**

1. Remove the inner ash retainer and the floor refractory slab **(A & B)**.

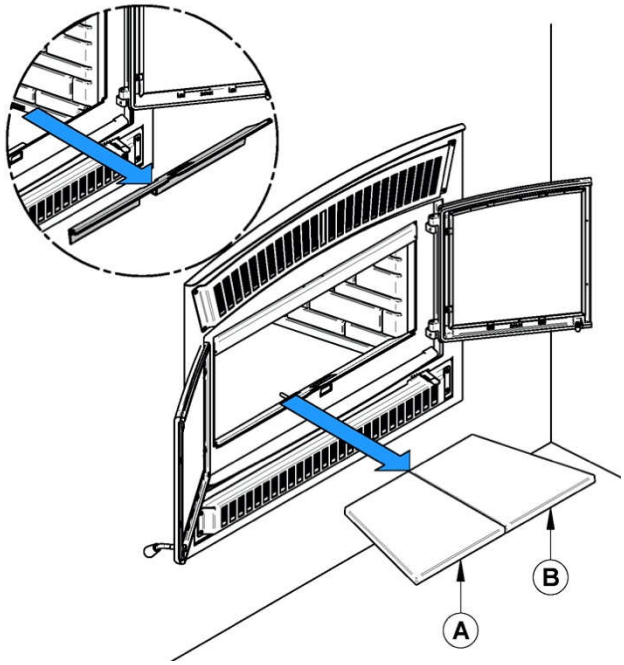

2. Using a power screwdriver and hex tip 5/16", remove the slab holder **(D)** and the left refractory slab **(C)**.

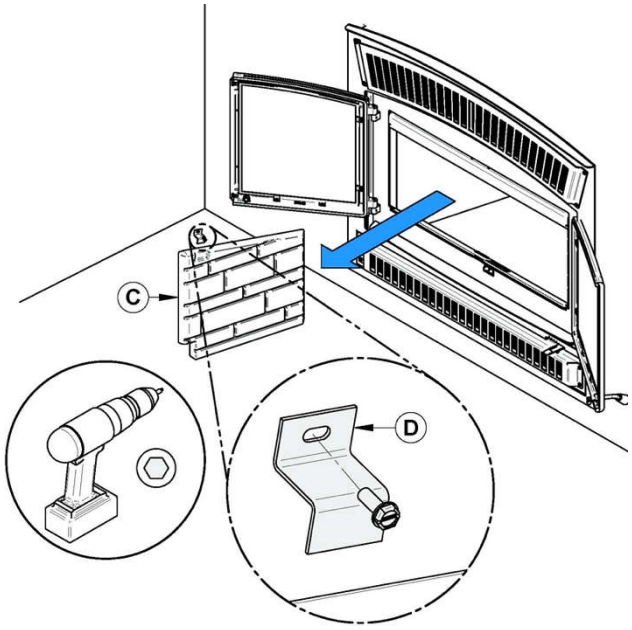

3. Starting with the rear tube, lean and insert the right end of the secondary air tube into the rear right channel hole. Then, lift and push the tube towards the right inside the hole in the right channel.

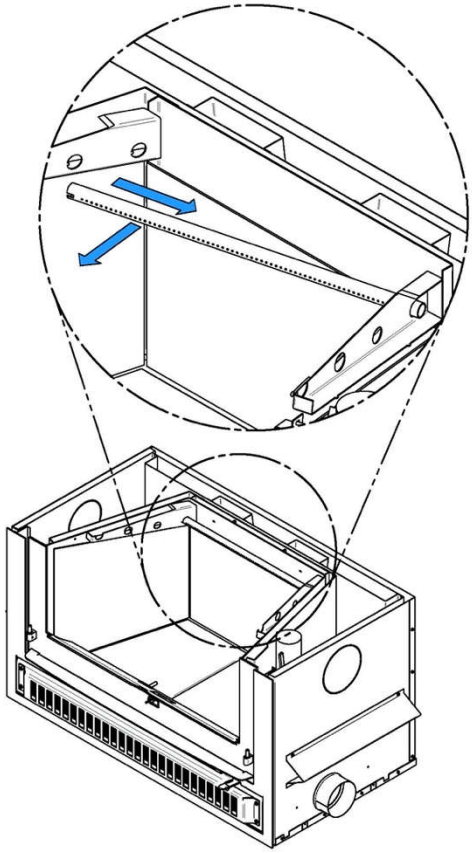

4. Align the notch in the left end of the tube with the tab of the left air channel hole.

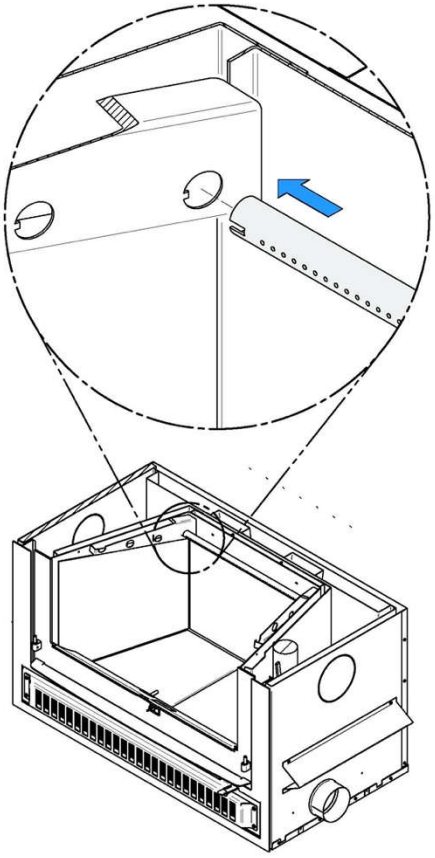

5. Insert a cotter pin in the last hole on the right side of the tube. Then bend the tabs on the pin to keep in place.
6. Repeat **steps 4, 5 and 6** for the two tubes in the back then install the baffle. Then, install the two front tubes.

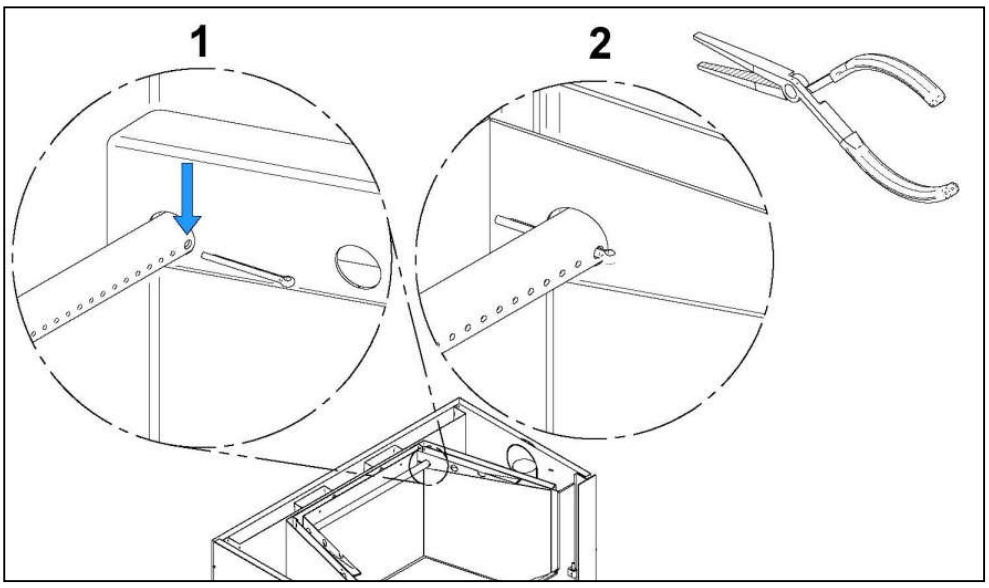

To remove the tubes use the above steps in reverse order.

Note that secondary air tubes can be replaced without removing the baffle board.

APPENDIX 7 - AIR CONTROL SNAP DISC REPLACEMENT

1. Remove the inner ash retainer and the floor refractory slab **(A & B)**.

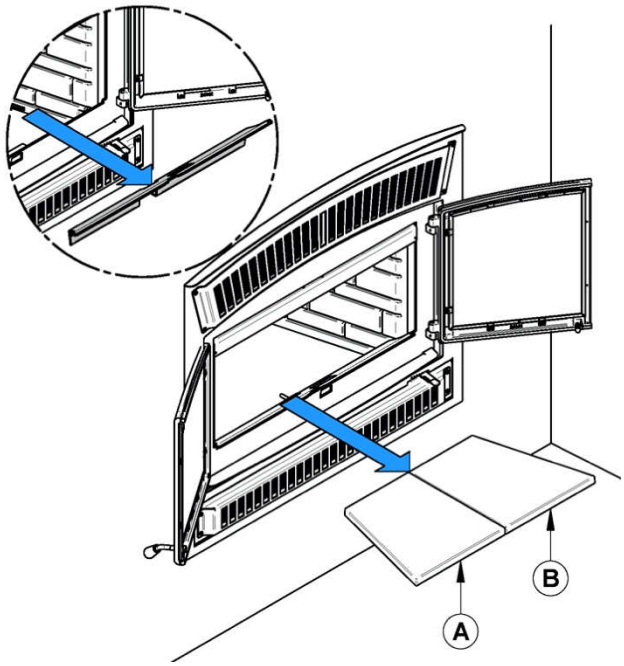

2. Using a power screwdriver and hex tip 5/16", remove the slab holder **(D)** and the left refractory slab **(C)**.

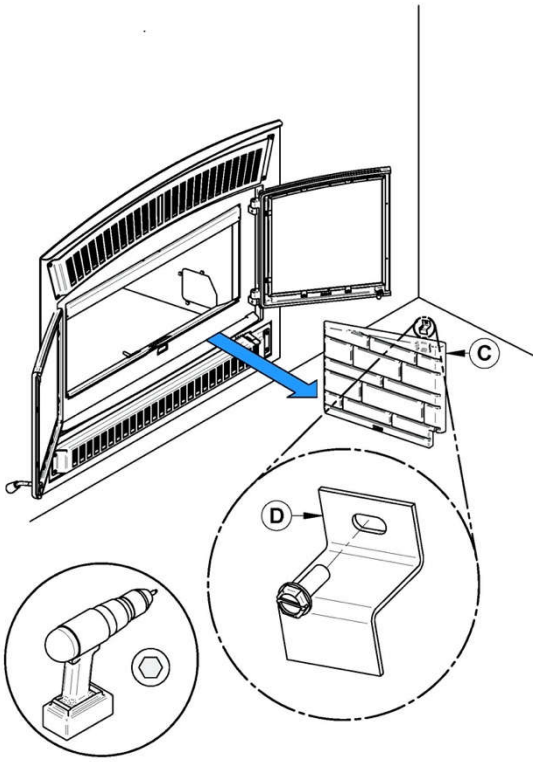

3. Remove the 4 bolts **(E)** holding the access door **(F)** with a 1/4" ratchet.

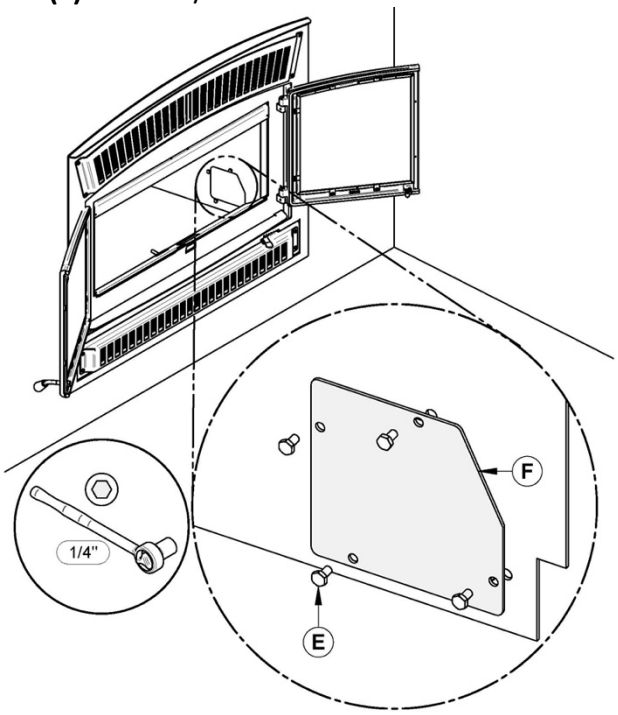

4. Remove the thermodisc **(G)** by unscrewing the 2 screws holding it in place **(H).**

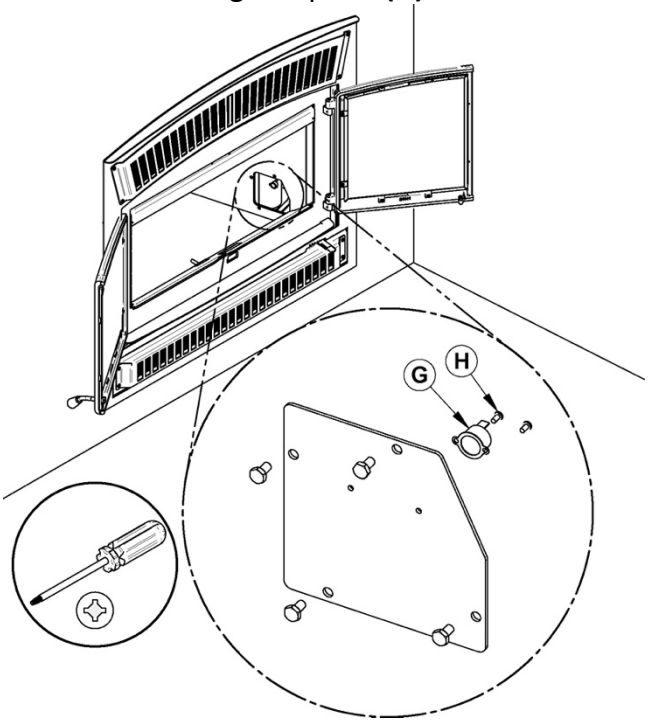

APPENDIX 8 - ELECTRICAL WIRING

Have the wiring installed by a qualified electrician. Connect the wires from the power outlet to the terminal block, making sure that the white wire matches the white wire on the terminal. Connect the black wire with the black wire of the terminal block. The ground (green or skinned wire) must be attached to the fireplace metal frame. See appendix 9 for parts list.

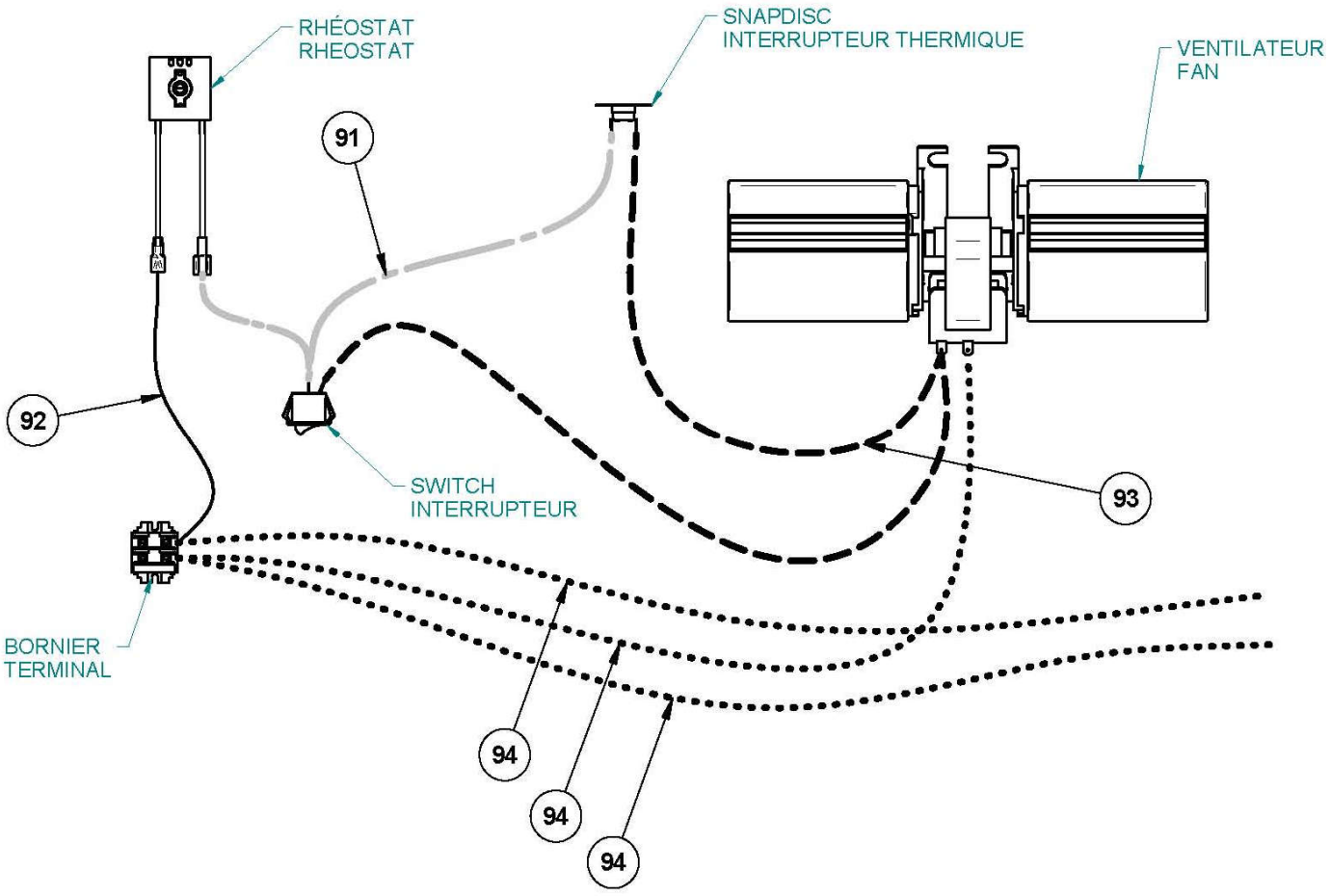

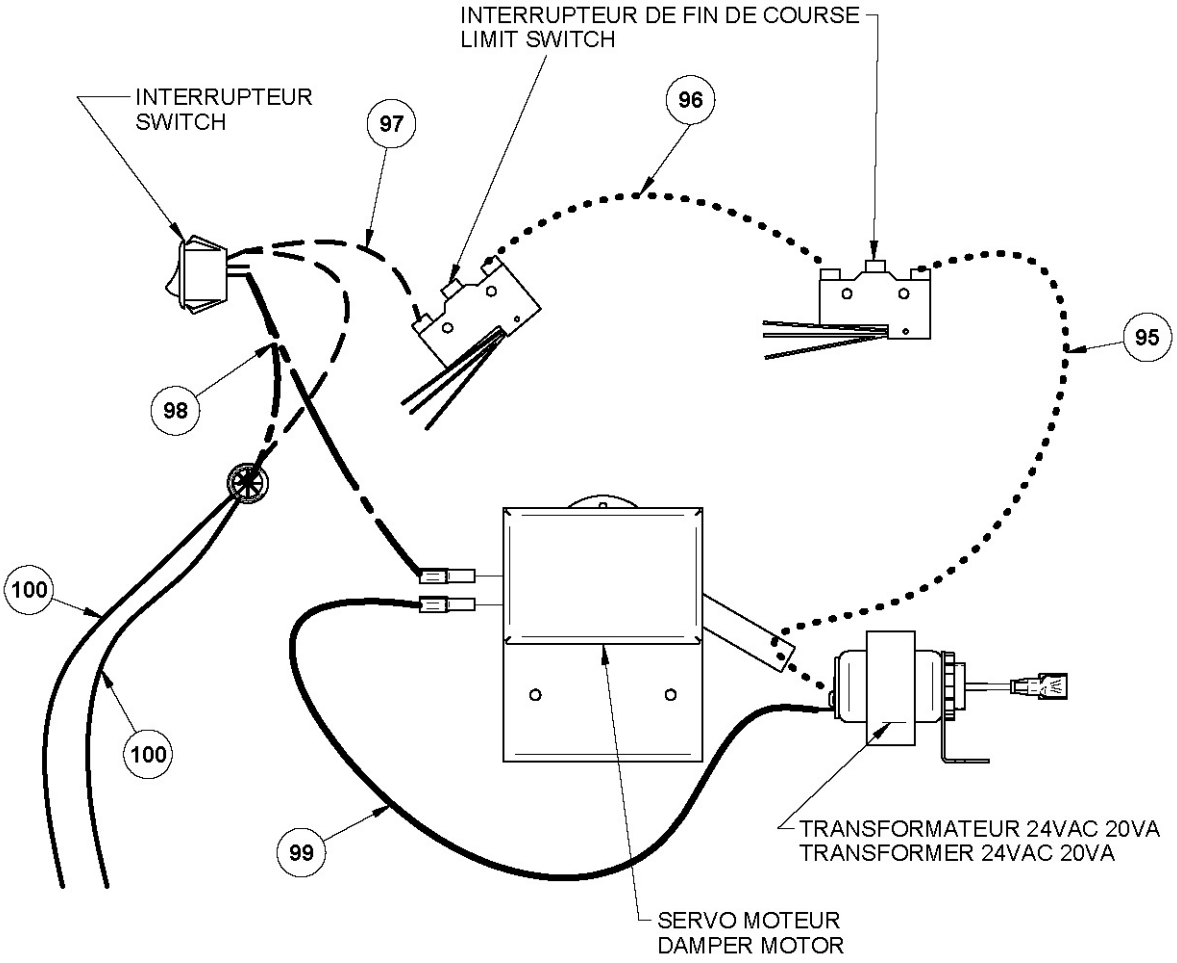
INTERRUPTEUR DE FIN DE COURSE
LIMIT SWITCH
INTERRUPTEUR
SWITCH
97
96
95
98
100
100
99
TRANSFORMATEUR 24VAC 20VA
TRANSFORMER 24VAC 20VA
SERVO MOTEUR
DAMPER MOTOR

APPENDIX 9 - EXPLODED DIAGRAM AND PARTS LIST

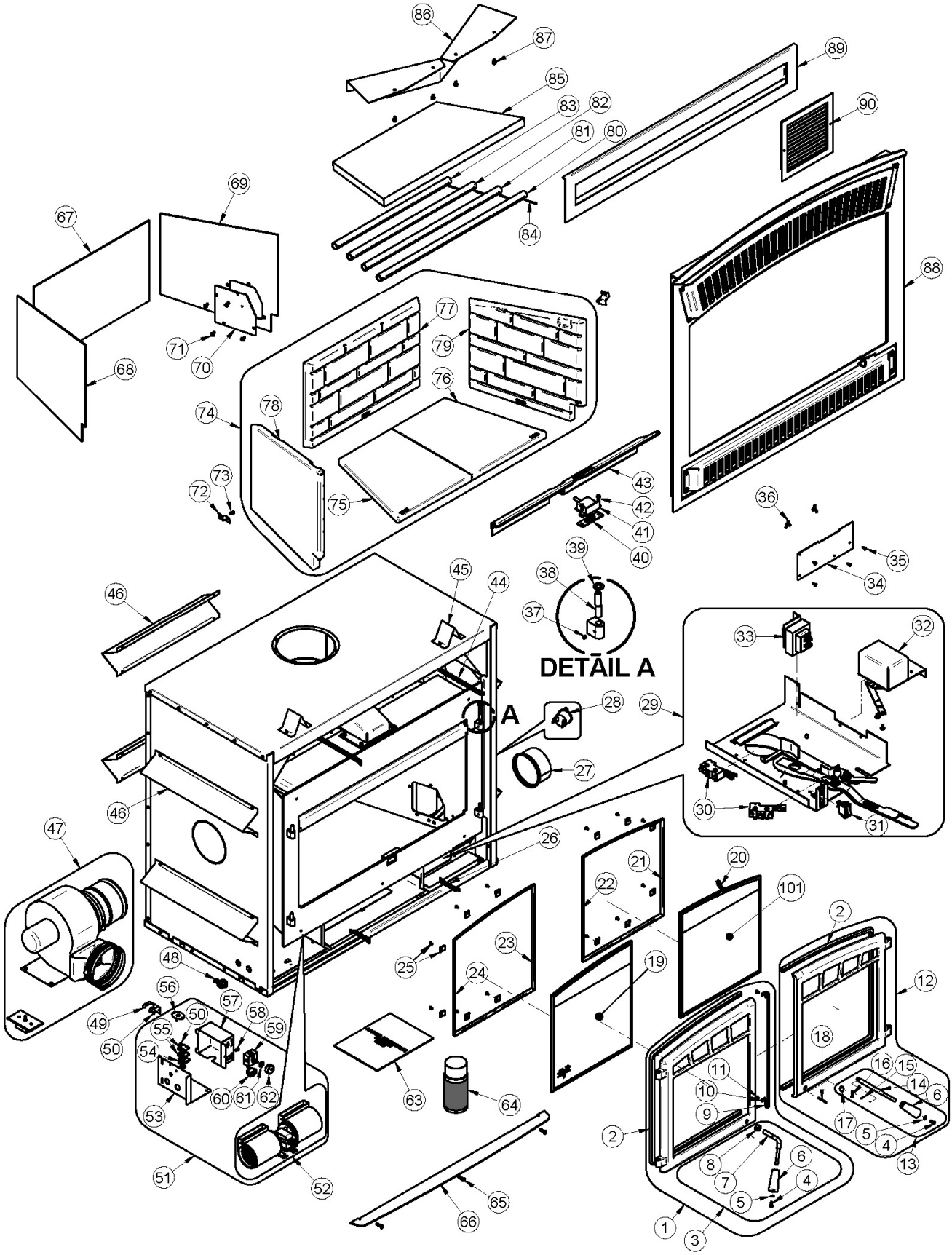

IMPORTANT: THIS IS DATED INFORMATION. When requesting service or replacement parts for your stove, please provide the model number and the serial number. We reserve the right to change parts due to technology upgrade or availability. Contact an authorized dealer to obtain any of these parts. Never use substitute materials. Use of non-approved parts can result in poor performance and safety hazards.

#	Item	Description	Qty
1	SE24140	LEFT DOOR FRAME WITH HANDLE AND GASKET	1
2	AC06500	SILICONE AND 5/8" X 8' BLACK DOOR GASKET KIT	1
3	SE68960	LEFT HANDLE AND LATCH KIT	1
4	30025	1/4-20 X 1/2" PAN-HEAD QUADREX BLACK SCREW	2
5	30187	STAINLESS WASHER ID 17/64" X OD 1/2"	2
6	30898	ROUND WOODEN BLACK HANDLE	2
7	PL68960	LEFT HANDLE DOOR	1
8	30039	NUT 1/2-20	1
9	40030	ROUND 1/4'' ROPE WITH ADHESIVE	2
10	PL61410	GASKET RETAINER	2
11	30124	SCREW #8 - 32 X 5/16'' TRUSS QUADREX ZINC	2
12	SE24141	RIGHT DOOR FRAME WITH HANDLE AND GASKET	1
13	SE68961	RIGHT HANDLE AND LATCH KIT	1
14	PL68961	RIGHT DOOR HANDLE	1
15	30062	SPRING PIN 3/32" X 1/2"	1
16	30043	CLEVIS PIN 3/16" x 7/8''	1
17	8435-08	BLACK OXIDE LATCH MECHANISM BEARING	1
18	30101	SPRING TENSION PIN 5/32" DIA X 1 1/2" L	1
19	23062	HE350 LEFT SIDE ROBAX GLASS	1
20	AC06400	3/4" (FLAT) X 6' BLACK SELF-ADHESIVE GLASS GASKET	2
21	PL68836	RIGHT GLASS FRAME	1
22	PL68837	RIGHT GLASS FRAME	1
23	PL68840	LEFT GLASS FRAME	1
24	PL68841	LEFT GLASS FRAME	1
25	SE53585	GLASS RETAINER KIT WITH SCREWS (12 PER KIT)	1
26	30472	SPRING 1/2'' OUTSIDE DIA. X 3''L	2
27	PL68915	ADAPTER 5"	1
28	44191	THERMODISC 36T12 F275	1
29	SE68877	AIR CONTROL MECHANISM ASSEMBLY	1
30	44190	LIMIT SWITCH	2
31	60236	RED NEON ROCKER SWITCH	1
32	51000	HONEYWELL 24V DAMPER MOTOR	1
33	60208	TRANSFORMER 120 V/24 V 20 VA	1
34	PL68781	AIR INLET PLATE	1
35	30131	BLACK METAL SCREW #10 X 1/2" TYPE "A" PAN QUADREX	4
36	30485	WING NUT 1/4-20 X 1/2'' ZINC PLATTED	2
37	30117	SOCKET SET SCREW #10-32 X 1/4"	2
38	30586	HINGE PIN	2
39	30203	FLAT WASHER .682" OD X .390" ID BRASS	2

#	Item	Description	Qty
40	21490	PILOT INSULATION	1
41	SE68758	PILOT ASSEMBLY	1
42	30094	HEX SCREW WASHER HEAD 1/4-20 X 3/4" F ZINC TYPE	1
43	PL68759	INNER ASH RETAINER	1
44	30767	SPRING 1/2'' OUTSIDE DIA. X 8'' LONG	1
45	PL60266	LONG TOP STANDOFF	2
46	PL68952	SIDE STANDOFF	6
47	VA4460	FORCED AIR DISTRIBUTION KIT	1
48	60201	CONNECTOR 1 SCREW 3/8" FOR BX WIRE	1
49	PL66523	THERMODISC SUPPORT	1
50	30133	METAL SCREW #8 X 3/8" PAN QUADREX TYPE "A" ZINC	2
51	SE68951	WIRED ELECTRICAL PARTS WITH JUNCTION BOX	1
52	44122	DOUBLE CAGE BLOWER 176 CFM (CLASS H)	1
53	PL68950	JUNCTION BOX COVER	1
54	60204B	TERMINAL BLOCK (END SECTION)	1
55	60204A	TERMINAL 3/8" SECTION	2
56	44046	THERMODISC F110-20F	1
57	PL68951	CONNECTOR BLOCK CASE	1
58	30154	BLACK SCREW #10 X 5/8" ROBERTSON TYPE A	1
59	44080	RHEOSTAT WITH NUT	1
60	44091	ROCKER SWITCH 2 POSITION MSR-8	1
61	44087	RHEOSTAT NUT	1
62	44085	RHEOSTAT KNOB	1
63	SE45856	HE350 OWNER'S MANUAL KIT	1
64	AC05959	METALLIC BLACK STOVE PAINT - 342 g (12oz) AEROSOL	1
65	30506	SCREW PAN TORX TYPE F 1/4-20 X 1" BLACK	3
66	PL68839	DÉCORATIVE ASH LIP	1
67	21463	REAR COMBUSTION CHAMBER INSULATION	1
68	21464	LEFT COMBUSTION CHAMBER INSULATION	1
69	21465	RIGHT COMBUSTION CHAMBER INSULATION	1
70	PL68873	THERMODISC ACCESS	1
71	30084	NUT 1/4-20 X 1/2" GRADE 5	4
72	PL53145	REFRACTORY RETAINER	2
73	30026	THREAD CUTTING SCREW 10-24 F 5/8" HEX WASHER HEAD	2
74	AC02360	CLASSIC MOULDED REFRACTORY BRICK PANELS	1
75	22025	LEFT FLOOR REFRACTORY	1
76	22026	RIGHT FLOOR REFRACTORY	1
77	22027	REAR REFRACTORY	1
78	22028	LEFT REFRACTORY	1
79	22029	RIGHT REFRACTORY	1
80	PL68762	FRONT SECONDARY AIR TUBE	1
81	PL68763	CENTER FRONT SECONDARY AIR TUBE	1
82	PL68764	REAR SECONDARY AIR TUBE	1

#	Item	Description	Qty
83	PL68765	CENTER SECONDARY AIR TUBE	1
84	30068	STAINLESS STEEL COTTER PIN 1/8" X 1 1/2"	4
85	21265	BAFFLE (C-CAST)	1
86	PL68850	BAFFLE DEFLECTOR	1
87	30060	THREAD-CUTTING SCREW 1/4-20 X 1/2" F HEX STEEL SLOT WASHER C102 ZINC	4
88	VBA1540	TRADITIONAL STYLE FACEPLATE - METALLIC BLACK	1
89	AC01378	WARM AIR CIRCULATION GRILLE - MODERN STYLE	1
90	30540	HOT AIR GRAVITY DISTRIBUTION KIT GRILL	1
91	60380	ELECTRIC WIRE DOUBLE BLACK SEW2 200 DEG C 18 AWG 4'' ET 35 ''	1
92	60381	ELECTRIC WIRE WHITE TEW 105 DEG C 18 AWG 6"	1
93	60379	ELECTRIC WIRE DOUBLE BLACK SEW2 200 DEG C 18 AWG 16'' ET 35 "	1
94	60374	ELECTRIC WIRE WHITE SEW2 200 DEG C 18 AWG 46''	3
95	60375	ELECTRIC WIRE WHITE TEW 105 DEG C 18 AWG 12.5"	1
96	60376	ELECTRIC WIRE WHITE TEW 105 DEG C 18 AWG 12.5"	1
97	60377	ELECTRIC WIRE DOUBLE WHITE TEW 105 DEG C 18 AWG 6'' ET 6''	1
98	60378	ELECTRIC WIRE DOUBLE BLACK TEW 105 DEG C 18 AWG 6'' ET 6''	1
99	60278	ELECTRIC WIRE BLACK TEW 105 DEG C 18 AWG 6''	1
100	60291	ELECTRIC WIRE BLACK SEW2 200 DEG C 18 AWG 12''	2
101	23063	HE350 RIGHT SIDE ROBAX GLASS	1

VENTIS LIMITED LIFETIME WARRANTY

The warranty of the manufacturer extends only to the original retail purchaser and is not transferable. This warranty covers brand new products only, which have not been altered, modified nor repaired since shipment from factory. Proof of purchase (dated bill of sale), model name and serial number must be supplied when making any warranty claim to your VENTIS dealer.

This warranty applies to normal residential use only. Damages caused by misuse, abuse, improper installation, lack of maintenance, over firing, negligence or accident during transportation, power failures, downdrafts, venting problems or under-estimated heating area are not covered by this warranty. The recommended heated area for a given appliance is defined by the manufacturer as its capacity to maintain a minimum acceptable temperature in the designated area in case of a power failure.

This warranty does not cover any scratch, corrosion, distortion, or discoloration. Any defect or damage caused by the use of unauthorized or other than original parts voids this warranty. An authorized qualified technician must perform the installation in accordance with the instructions supplied with this product and all local and national building codes. Any service call related to an improper installation is not covered by this warranty.

The manufacturer may require that defective products be returned or that digital pictures be provided to support the claim. Returned products are to be shipped prepaid to the manufacturer for investigation. Transportation fees to ship the product back to the purchaser will be paid by the manufacturer. Repair work covered by the warranty, executed at the purchaser's domicile by an authorized qualified technician requires the prior approval of the manufacturer. All parts and labour costs covered by this warranty are limited according to the table below.

The manufacturer, at its discretion, may decide to repair or replace any part or unit after inspection and investigation of the defect. The manufacturer may, at its discretion, fully discharge all obligations with respect to this warranty by refunding the wholesale price of any warranted but defective parts. The manufacturer shall, in no event, be responsible for any uncommon, indirect, consequential damages of any nature, which are in excess of the original purchase price of the product. A one-time replacement limit applies to all parts benefiting from lifetime coverage. This warranty applies to products purchased after March 1st, 2015.

DESCRIPTION	**WARRANTY APPLICATION**	
	PARTS	**LABOUR**
Combustion chamber (welds only), castings and convector air-mate	Lifetime**	4 years
Plating* (defective manufacture) - subject to limitations above Ceramic glass (thermal breakage only*)	Lifetime**	N/A
Stainless steel firebox components, vermiculite, C-Cast or equivalent baffle* and secondary air tubes*, glass retainers and handle assembly	5 years**	3 years
Surrounds and heat shields, ash drawer, steel legs, pedestal and trim (aluminum extrusions)	5 years	N/A
Carbon steel firebox components	3 years	2 years
Blowers, heat sensors, switches, rheostat, wiring and electronics	2 years	1 year
Paint (peeling*), gaskets, insulations, refractory bricks (fireplace only**) and ceramic fibre blankets	1 year	N/A
All parts replaced under the warranty	90 days	N/A

Pictures required** ****Limited to one replacement

Labour cost and repair work to the account of the manufacturer are based on a predetermined rate schedule and must not exceed the wholesale price of the replacement part.

Shall your unit or a components be defective, contact immediately your **VENTIS** dealer. To accelerate processing of your warranty claim, make sure to have on hand the following information when calling:

- Your name, address and telephone number;
- Bill of sale and dealer's name;
- Installation configuration;
- Serial number and model name as indicated on the nameplate
- Nature of the defect and any relevant information.

Before shipping your unit or defective component to our plant, you must obtain an Authorization Number from your VENTIS dealer. Any merchandise shipped to our plant without authorization will be refused automatically and returned to sender.

Appendix E

Dry Gas meter Calibration Data

Dry Gas Metering System Calibration
Y factor for Method 5G sampling

Manufacturer:	American Meter Company
Model:	DTM-200A
Serial Number:	90R054300

Previous Calibration Comparision

Date	2016-03-30	Acceptable	
		Deviation (5%)	Deviation
y Factor	1.003	0.05015	0.012
Acceptance			

Average Gas Meter y Factor

1.015

Calibration Date:	06-14-16
Calibrated by:	Vincent Pelletier
Calibration Frequency:	Post Test
Next Calibration Due:	08-04-16
Instrument Range:	1.000 cfm
Standard Temp.:	73 oF
Standard Press.:	29.92 "Hg
Barometric Press.:	29.8 "Hg
Signature/Date:	Vincent Pelletier 2016-06-14

Current Calibration

Acceptable y Deviation	0.050
Maximum y Deviation	0.025
Acceptance	Acceptable

Reference Standard *		
Standard Calibrator	Model	Standard Test Meter
	S/N	07J264834
	Calib. Date	Sept. 02, 2015
	Calib. Value	0.9931 y factor (ref)

Calibration Parameters	Run 1	Run 2	Run 3
Vacuum ("Hg)	0.00	0.00	0.00
dH ("H2O)	0.00	0.00	0.00
Initial Reference Meter	728.265	732.238	736.434
Final Reference Meter	732.238	736.434	739.292
Initial DGM	1249.067	1253	1257.17
Final DGM	1253	1257.17	1259.905
Temp. Ref. Meter (°F), Tr	78.7	79.2	79.3
Temperature DGM (°F), Td	79.5	79.6	80.1
Time (Minutes)	43.0	75.0	30.0
Net Volume Ref. Meter, Vr	3.973	4.196	2.858
Net Volume DGM, Vd	3.933	4.17	2.735
Gas Meter y Factor =	**1.005**	**1.000**	**1.039**
Gas Meter y Factor Deviation (from avg.)	0.010	0.015	0.025
Orifice dH@	**0.00**	**0.00**	**0.00**
Orifice dH@ Deviation (from avg.)	0.000	0.000	0.000

where: 0.091465116

1. Deviation = |Average value for all runs - current run value|
2. y = [Vr x (y factor (ref)) x (Pb) x (Td + 460) / [Vd x (Pb + (dH / 13.6)) x (Tr + 460]
3. dH@ = 0.0317 x dH / (Pb (Td + 460)) x [(Tr + 460) x time) / Vr]^2

* Reference calibration is traceable to NIST through NIST Test # 40674, Kimble ASTM E1272

Dry Gas Metering System Calibration
Y factor for Method 5G sampling

Manufacturer:	American Meter Company
Model:	DTM-200A
Serial Number:	98Z332226

Previous Calibration Comparision

Date	2016-03-30	Acceptable	
		Deviation (5%)	Deviation
y Factor	1.006	0.0503	0.007
Acceptance			

Average Gas Meter y Factor

0.999

Calibration Date:	06-14-16
Calibrated by:	Vincent Pelletier
Calibration Frequency:	Post Test
Next Calibration Due:	08-04-16
Instrument Range:	1.000 cfm
Standard Temp.:	73 oF
Standard Press.:	29.92 "Hg
Barometric Press.:	29.8 "Hg
Signature/Date:	Vincent Pelletier 2016-06-14

Current Calibration

Acceptable y Deviation	0.050
Maximum y Deviation	0.002
Acceptance	Acceptable

Reference Standard *		
Standard Calibrator	Model	Standard Test Meter
	S/N	07J264834
	Calib. Date	Sept. 02, 2015
	Calib. Value	0.9931 y factor (ref)

Calibration Parameters	Run 1	Run 2	Run 3
Vacuum ("Hg)	0.00	0.00	0.00
dH ("H2O)	0.00	0.00	0.00
Initial Reference Meter	719.913	722.591	725.504
Final Reference Meter	722.591	725.504	728.265
Initial DGM	1082.729	1085.396	1088.294
Final DGM	1085.396	1088.294	1091.036
Temp. Ref. Meter (°F), Tr	76.7	77.7	78.2
Temperature DGM (°F), Td	76.3	78.0	78.5
Time (Minutes)	30.0	34.0	30.0
Net Volume Ref. Meter, Vr	2.678	2.913	2.761
Net Volume DGM, Vd	2.667	2.898	2.742
Gas Meter y Factor =	**0.996**	**0.999**	**1.001**
Gas Meter y Factor Deviation (from avg.)	0.002	0.000	0.002
Orifice dH@	**0.00**	**0.00**	**0.00**
Orifice dH@ Deviation (from avg.)	0.000	0.000	0.000

where: 0.0889

1. Deviation = |Average value for all runs - current run value|
2. y = [Vr x (y factor (ref)) x (Pb) x (Td + 460) / [Vd x (Pb + (dH / 13.6)) x (Tr + 460]
3. dH@ = 0.0317 x dH / (Pb (Td + 460)) x [(Tr + 460) x time) / Vr]^2

* Reference calibration is traceable to NIST through NIST Test # 40674, Kimble ASTM E1272

Dry Gas Metering System Calibration
Y factor for Method 5G sampling

Manufacturer:	Rockwell International
Model:	S-275
Serial Number:	00938

Average Gas Meter y Factor
0.987

Calibration Date:	06-14-16
Calibrated by:	Vincent Pelletier
Calibration Frequency:	6-month
Next Calibration Due:	12-13-16
Instrument Range:	1.000 cfm
Standard Temp.:	68.1 oF
Standard Press.:	29.92 "Hg
Barometric Press.:	29.8 "Hg
Signature/Date:	Vincent Pelletier 2016-06-14

Previous Calibration Comparision

Date	2016-06-02	Acceptable Deviation (5%)	Deviation
y Factor	0.983	0.04915	0.004
Acceptance	Acceptable		

Current Calibration

Acceptable y Deviation	N/A
Maximum y Deviation	N/A
Acceptance	N/A

Reference Standard *		
Standard Calibrator	Model	Standard Test Meter
	S/N	07J264834
	Calib. Date	Sept. 02, 2015
	Calib. Value	0.9931 y factor (ref)

Calibration Parameters	Run 1	Run 2	Run 3
Vacuum ("Hg)	0.00	0.00	0.00
dH ("H2O)	0.00	0.00	0.00
Initial Reference Meter	739.292	744.509	751.327
Final Reference Meter	744.509	751.327	757.625
Initial DGM	565.410	570.710	577.527
Final DGM	570.710	577.527	583.821
Temp. Ref. Meter (°F), Tr	81.2	81.3	80.8
Temperature DGM (°F), Td	80.7	80.4	79.7
Time (Minutes)	31.0	40.0	37.0
Net Volume Ref. Meter, Vr	5.217	6.818	6.298
Net Volume DGM, Vd	5.3	6.817	6.294
Gas Meter y Factor =	**0.977**	**0.992**	**0.992**
Gas Meter y Factor Deviation (from avg.)	0.010	0.005	0.005
Orifice dH@	**0.00**	**0.00**	**0.00**
Orifice dH@ Deviation (from avg.)	0.000	0.000	0.000

where: 0.170967742

1. Deviation = |Average value for all runs - current run value|
2. y = [Vr x (y factor (ref)) x (Pb) x (Td + 460) / [Vd x (Pb + (dH / 13.6)) x (Tr + 460]
3. dH@ = 0.0317 x dH / (Pb (Td + 460)) x [(Tr + 460) x time) / Vr]^2

* Reference calibration is traceable to NIST through NIST Test # 40674, Kimble ASTM E1272

Appendix F

Unit Pre-Burn documentation

May 26th, 2016

Elapsed Time (min)	Flue temp °F	Room temp °F	Tunnel dry bulb °F	top °F	back °F	right °F	left °F	bottom °F	scale lbs
0	374.80	78.59	108.19	362.69	419.93	490.36	449.78	413.41	7.13
10	652.57	78.71	149.20	641.25	409.48	484.63	448.22	405.47	53.58
20	722.49	80.58	154.64	753.26	439.60	471.97	435.77	443.36	48.47
30	741.92	83.01	158.66	820.59	465.06	469.61	419.39	465.05	44.03
40	749.28	85.93	163.11	859.36	485.21	470.89	403.27	473.06	39.85
50	758.02	86.68	166.29	881.74	502.78	473.88	390.45	481.46	35.72
60	754.23	86.79	165.39	883.82	518.50	479.88	382.63	495.88	31.89
70	742.28	88.26	163.53	903.03	527.35	487.69	377.16	509.66	28.41
80	737.61	88.08	162.42	912.96	534.94	496.22	375.90	525.85	25.25
90	708.95	89.48	157.61	866.59	540.13	505.67	375.30	541.46	22.54
100	679.86	89.21	153.48	820.84	539.12	516.35	376.69	552.14	20.39
110	642.17	88.62	147.92	761.13	537.54	529.48	379.92	557.32	18.60
120	599.99	89.33	142.31	708.45	533.75	545.20	383.33	557.90	17.23
130	561.27	88.17	136.83	652.99	525.16	558.00	387.89	551.54	16.26
140	524.34	87.20	132.48	584.64	513.40	566.25	394.18	543.19	15.58
150	490.16	86.99	128.04	528.87	500.85	567.26	400.90	532.38	15.04
160	467.16	86.71	125.20	492.11	486.83	562.90	405.89	520.87	14.56
170	451.34	86.54	122.89	468.56	467.56	556.71	409.10	509.98	14.15
180	439.57	85.94	121.15	455.19	451.47	550.12	411.52	499.88	13.68
190	427.70	85.22	119.62	441.03	437.81	542.37	412.70	490.83	13.28
200	419.54	85.15	118.17	430.07	426.24	534.40	413.48	481.36	12.90
210	412.13	85.10	117.30	419.55	416.80	527.60	413.62	473.07	12.55
220	401.86	84.72	115.98	404.76	409.98	521.29	413.41	465.84	12.18
230	393.65	84.64	114.91	394.82	404.44	514.33	411.14	460.01	11.85
240	389.97	84.62	114.17	390.24	398.72	507.61	408.91	453.63	11.48
250	382.66	84.23	113.34	382.82	394.54	501.20	406.69	447.41	11.15
260	378.22	84.03	112.41	375.81	391.46	494.36	404.69	442.45	10.83
270	372.57	83.52	111.77	368.82	388.43	486.24	402.50	437.19	10.50
280	367.14	83.55	111.11	365.47	384.67	477.36	399.81	432.04	10.18

Elapsed Time (min)	Flue temp °F	Room temp °F	Tunnel dry bulb °F	top °F	back °F	right °F	left °F	bottom °F	scale lbs
290	363.35	83.65	110.65	362.82	381.12	470.43	397.25	421.73	9.85
300	357.11	83.40	109.95	356.02	378.19	464.21	394.02	408.97	9.58
310	352.31	83.60	109.36	348.39	373.37	457.46	390.05	398.36	9.30
320	345.43	83.42	108.45	339.37	369.50	450.68	385.00	388.08	9.04
330	339.76	83.53	107.72	331.40	365.19	444.06	379.89	379.35	8.80
340	332.27	83.39	106.88	321.23	360.06	437.45	374.73	370.22	8.56
350	324.73	82.66	106.03	310.65	353.44	430.21	367.44	362.24	8.35
360	319.69	82.67	105.24	302.91	345.12	422.98	360.88	353.12	8.14
370	313.80	82.68	104.62	295.55	336.65	416.46	353.48	346.54	7.95
380	305.72	82.53	103.62	287.69	328.68	410.34	347.55	338.43	7.76
390	298.74	82.33	102.82	279.19	320.32	404.09	341.96	330.78	7.59
400	292.16	82.43	102.13	271.25	313.19	397.73	336.81	322.93	7.42
410	285.81	82.29	101.29	264.79	306.29	391.17	332.32	314.90	7.26
420	280.43	81.98	100.65	259.34	299.48	384.82	327.75	307.85	7.11
430	275.37	81.85	99.95	253.74	292.89	378.68	323.04	300.57	6.95
440	271.40	81.60	99.25	248.24	286.46	372.59	319.05	293.73	6.80
450	266.12	81.47	98.74	243.06	280.94	366.95	315.25	286.63	6.67
460	260.83	81.41	98.14	237.82	275.59	361.52	311.75	280.09	6.53
470	255.42	81.22	97.47	232.17	270.20	355.77	308.87	274.52	6.41
480	250.68	81.12	96.81	226.85	264.89	349.78	305.63	268.75	6.30
490	245.64	80.98	96.38	222.00	259.96	343.77	302.64	262.96	6.18
500	240.45	80.78	95.62	216.58	255.45	337.75	299.54	257.06	6.08
510	235.92	80.63	94.98	211.08	250.79	331.69	296.45	250.78	5.98
520	229.66	80.66	94.35	205.68	245.93	325.61	293.67	244.82	5.88
530	223.24	80.39	93.63	199.66	240.86	319.03	290.30	239.54	5.80
540	218.66	80.29	92.98	194.78	235.62	312.21	286.68	232.77	5.71
550	213.83	80.11	92.31	190.22	230.53	305.65	284.46	226.82	5.64
560	208.18	79.97	91.76	185.26	225.73	299.30	281.97	220.87	5.55
570	201.37	79.81	91.08	179.54	221.07	292.83	278.43	215.23	5.50
580	194.48	79.52	90.39	173.78	216.27	285.68	276.09	209.74	5.42
590	188.80	79.45	89.78	168.48	210.99	278.03	273.39	204.07	5.37

Elapsed Time (min)	Flue temp °F	Room temp °F	Tunnel dry bulb °F	top °F	back °F	right °F	left °F	bottom °F	scale lbs
600	183.47	79.31	89.21	163.83	205.59	270.25	270.28	197.90	5.31
610	179.05	79.26	88.62	159.86	200.72	262.89	267.58	192.58	5.27
620	174.30	79.20	88.11	156.15	195.78	255.89	264.61	187.22	5.22
630	170.65	79.04	87.63	152.72	191.11	249.29	262.12	182.20	5.18
640	166.56	78.95	87.17	149.74	186.65	243.10	259.26	177.95	5.14
650	163.10	78.79	86.76	146.49	182.70	237.23	256.48	173.85	5.09
660	159.18	78.86	86.36	143.51	179.14	231.74	254.05	169.84	5.07
670	156.04	78.92	85.97	140.90	175.56	226.39	251.79	165.97	5.04
680	152.57	78.84	85.61	138.08	172.26	221.18	249.33	162.32	5.03
690	149.00	78.82	85.27	135.38	168.95	216.04	246.39	158.95	5.01
700	145.86	78.66	84.90	132.82	165.74	210.96	244.28	155.89	4.99
710	142.79	78.50	84.63	130.42	162.55	206.01	241.79	152.86	4.97
720	139.89	78.53	84.30	128.07	159.31	201.17	239.17	149.96	4.95
730	137.09	78.45	83.97	125.87	156.23	196.41	236.90	146.95	4.94
740	134.40	78.47	83.72	123.76	153.22	191.91	234.40	144.22	4.92
750	132.06	78.38	83.47	121.86	150.47	187.58	231.83	141.66	4.91
760	129.69	78.20	83.20	120.02	147.88	183.45	228.76	139.16	4.90
770	127.68	78.27	83.00	118.36	145.27	179.47	226.37	136.78	4.89
780	125.55	78.24	82.75	116.79	143.01	175.75	223.81	134.48	4.88
790	123.74	78.22	82.58	115.38	140.62	172.24	221.35	132.26	4.86
800	122.14	78.07	82.34	114.05	138.44	168.91	219.06	130.28	4.86
810	120.57	77.95	82.15	112.78	136.54	165.82	216.77	128.44	4.84
820	118.96	77.92	81.97	111.61	134.66	162.92	214.48	126.74	4.84
830	117.36	77.89	81.76	110.44	132.95	160.18	212.46	125.00	4.82
840	116.06	77.86	81.57	109.33	131.22	157.58	210.48	123.39	4.81
850	114.93	77.74	81.45	108.32	129.75	155.13	208.46	121.96	4.80
860	113.62	77.60	81.20	107.36	128.15	152.80	206.42	120.49	4.80
870	112.52	77.62	81.10	106.44	126.82	150.62	204.38	119.12	4.77
880	111.02	77.47	80.66	105.63	125.55	148.58	202.42	117.91	4.77
890	109.86	77.41	80.37	104.95	124.35	146.79	200.19	116.59	4.75
900	108.78	77.38	80.10	104.20	123.07	145.06	198.10	115.50	4.75

Elapsed Time (min)	Flue temp °F	Room temp °F	Tunnel dry bulb °F	top °F	back °F	right °F	left °F	bottom °F	scale lbs
910	107.97	77.32	79.93	103.48	122.05	143.35	195.67	114.46	4.74
920	107.10	77.19	79.78	102.83	121.00	141.74	193.36	113.43	4.72
930	106.26	77.25	79.74	102.19	119.95	140.21	191.30	112.44	4.72
940	105.46	77.12	79.66	101.59	119.13	138.77	189.17	111.51	4.71
950	104.74	77.14	79.54	101.06	118.39	137.45	187.11	110.66	4.70
960	104.20	77.10	79.45	100.54	117.65	136.24	185.06	109.85	4.69
970	103.60	76.98	79.35	100.06	116.90	135.20	183.13	109.14	4.68
980	103.01	76.94	79.29	99.71	116.25	134.31	181.45	108.48	4.67

May 30th, 2016

Elapsed Time (min)	Flue temp °F	Room temp °F	Tunnel dry bulb °F	top °F	back °F	right °F	left °F	bottom °F	scale lbs
0	264.85	76.85	92.48	294.09	320.45	401.60	370.63	335.70	7.63
10	515.17	75.82	121.35	522.31	309.56	393.50	357.99	322.24	56.75
20	658.28	79.23	139.92	766.38	322.11	381.22	345.47	346.86	52.89
30	722.15	85.93	150.31	833.33	357.18	391.10	332.16	385.36	48.64
40	740.33	85.52	154.84	842.20	396.51	407.12	320.83	412.27	44.58
50	744.70	87.54	156.55	865.19	427.18	422.17	313.26	428.38	40.83
60	624.21	88.76	133.25	806.77	442.03	433.10	311.72	430.42	38.23
70	594.09	89.74	134.08	807.28	434.81	431.76	311.33	416.87	36.13
80	586.75	86.71	132.87	812.49	426.48	426.49	308.97	407.80	34.04
90	577.98	86.42	131.68	807.70	420.53	424.80	307.01	403.21	32.02
100	572.89	85.38	131.09	809.36	419.30	426.18	304.05	402.84	30.03
110	576.79	87.16	130.98	820.52	419.36	429.73	302.74	405.34	28.06
120	567.86	87.20	130.09	814.43	421.75	435.01	299.46	408.44	26.16
130	540.94	87.02	127.67	740.89	420.28	440.77	296.55	410.79	24.51
140	514.10	87.00	124.88	674.32	415.58	448.27	292.42	410.50	23.10
150	496.88	87.20	122.99	646.44	413.13	455.01	289.85	408.26	21.77
160	487.19	87.03	121.65	623.33	412.73	459.33	289.90	408.00	20.53

Elapsed Time (min)	Flue temp °F	Room temp °F	Tunnel dry bulb °F	top °F	back °F	right °F	left °F	bottom °F	scale lbs
170	467.30	86.99	119.76	583.97	411.90	462.55	288.98	407.70	19.47
180	459.83	86.67	118.34	574.10	410.84	464.78	288.02	404.53	18.58
190	456.99	86.57	117.46	553.62	404.34	462.31	288.29	404.08	17.81
200	443.69	86.32	116.43	535.40	395.48	459.45	290.26	405.23	17.13
210	429.63	86.36	114.79	510.09	386.93	457.51	293.75	404.66	16.57
220	395.33	86.05	112.15	470.77	378.59	455.05	297.85	401.54	16.18
230	376.45	85.59	110.24	439.84	371.15	448.57	299.98	396.39	15.85
240	358.86	85.51	108.63	417.28	363.68	441.31	302.59	391.33	15.56
250	343.52	85.28	107.13	396.93	355.81	435.00	306.04	386.30	15.28
260	334.13	84.99	106.11	384.28	347.51	430.17	310.11	381.10	15.02
270	326.38	84.83	105.13	373.65	339.92	426.40	313.82	376.65	14.75
280	320.51	84.76	104.46	364.78	333.10	423.59	317.10	372.88	14.50
290	315.52	84.57	103.80	357.48	328.01	421.57	320.70	368.66	14.23
300	310.10	84.31	103.31	352.04	322.45	419.69	322.44	366.04	13.98
310	305.76	84.26	102.80	346.98	318.42	417.76	324.22	363.31	13.72
320	303.35	84.18	102.36	343.47	314.85	415.69	325.25	360.90	13.48
330	301.71	84.14	102.04	340.93	311.07	413.55	326.55	358.11	13.24
340	298.04	83.72	101.75	337.93	308.31	411.60	327.06	356.47	13.01
350	295.75	83.80	101.40	334.77	305.25	409.98	327.73	354.42	12.78
360	295.69	83.63	101.13	333.33	303.02	408.65	328.61	352.33	12.54
370	295.75	83.67	100.98	331.95	301.37	407.73	328.56	350.61	12.30
380	294.20	83.62	100.81	328.66	300.44	407.82	328.23	350.19	12.07
390	292.75	83.68	100.71	327.39	299.24	408.16	327.36	348.35	11.84
400	292.09	83.59	100.52	325.99	297.80	408.00	327.54	346.35	11.62
410	289.10	83.37	100.26	321.73	296.97	407.12	325.74	343.81	11.42
420	284.15	83.26	99.84	312.92	295.18	406.03	323.94	341.14	11.22
430	279.36	83.36	99.42	305.52	293.48	403.81	320.25	337.99	11.04
440	276.01	83.24	98.98	299.66	290.74	400.39	316.45	333.95	10.86
450	272.89	83.04	98.60	295.05	288.32	396.37	313.31	329.91	10.68
460	268.82	82.85	98.18	290.00	285.65	392.26	310.75	326.45	10.51
470	263.20	82.81	97.70	282.26	282.73	387.74	307.79	322.24	10.35

Elapsed Time (min)	Flue temp °F	Room temp °F	Tunnel dry bulb °F	top °F	back °F	right °F	left °F	bottom °F	scale lbs
480	258.74	82.73	97.22	276.86	279.52	383.45	305.99	317.33	10.20
490	256.51	82.61	96.86	273.09	276.83	379.40	303.18	312.01	10.04
500	254.08	82.50	96.54	269.89	274.45	374.73	301.07	307.53	9.89
510	251.43	82.38	96.33	266.42	272.32	369.87	298.20	303.31	9.75
520	248.02	82.46	95.97	262.12	270.14	364.94	296.09	299.86	9.61
530	245.77	82.25	95.63	258.98	267.64	359.78	293.23	295.51	9.47
540	242.99	82.07	95.35	255.50	264.88	354.97	290.30	291.85	9.34
550	240.11	82.10	94.97	251.11	262.03	350.32	287.63	288.18	9.20
560	236.74	81.96	94.65	247.23	258.81	345.65	284.08	285.12	9.08
570	234.28	81.88	94.30	243.29	256.10	341.06	281.45	282.41	8.96
580	230.92	81.81	93.90	239.37	252.68	336.37	278.72	279.20	8.82
590	228.60	81.71	93.51	235.67	249.28	331.79	276.08	276.45	8.70
600	225.86	81.66	93.38	232.18	246.20	327.55	273.53	273.70	8.60
610	222.98	81.32	93.00	228.22	242.63	323.36	271.08	270.06	8.50
620	219.69	81.40	92.64	224.55	239.48	319.21	269.24	266.03	8.39
630	215.60	81.31	92.28	219.63	236.26	314.91	266.88	262.00	8.30
640	211.83	81.13	91.85	214.49	232.68	310.43	264.84	257.40	8.20
650	208.56	80.99	91.53	210.37	229.16	305.73	261.66	252.82	8.11
660	205.44	80.91	91.16	206.96	225.77	301.12	258.21	248.37	8.01
670	203.16	80.69	90.86	204.04	222.62	296.81	254.58	244.44	7.94
680	201.08	80.65	90.61	201.81	219.61	293.09	250.42	240.94	7.84
690	197.97	80.54	90.24	198.65	217.03	289.79	247.73	237.72	7.76
700	195.51	80.54	89.95	195.22	214.16	286.50	245.17	234.00	7.69

May 31st, 2016

Elapsed Time (min)	Flue temp °F	Room temp °F	Tunnel dry bulb °F	top °F	back °F	right °F	left °F	bottom °F	scale lbs
0	374.80	78.59	108.19	362.69	419.93	490.36	449.78	413.41	7.13
10	652.57	78.71	149.20	641.25	409.48	484.63	448.22	405.47	53.58
20	722.49	80.58	154.64	753.26	439.60	471.97	435.77	443.36	48.47
30	741.92	83.01	158.66	820.59	465.06	469.61	419.39	465.05	44.03
40	749.28	85.93	163.11	859.36	485.21	470.89	403.27	473.06	39.85
50	758.02	86.68	166.29	881.74	502.78	473.88	390.45	481.46	35.72
60	754.23	86.79	165.39	883.82	518.50	479.88	382.63	495.88	31.89
70	742.28	88.26	163.53	903.03	527.35	487.69	377.16	509.66	28.41
80	737.61	88.08	162.42	912.96	534.94	496.22	375.90	525.85	25.25
90	708.95	89.48	157.61	866.59	540.13	505.67	375.30	541.46	22.54
100	679.86	89.21	153.48	820.84	539.12	516.35	376.69	552.14	20.39
110	642.17	88.62	147.92	761.13	537.54	529.48	379.92	557.32	18.60
120	599.99	89.33	142.31	708.45	533.75	545.20	383.33	557.90	17.23
130	561.27	88.17	136.83	652.99	525.16	558.00	387.89	551.54	16.26
140	524.34	87.20	132.48	584.64	513.40	566.25	394.18	543.19	15.58
150	490.16	86.99	128.04	528.87	500.85	567.26	400.90	532.38	15.04
160	467.16	86.71	125.20	492.11	486.83	562.90	405.89	520.87	14.56
170	451.34	86.54	122.89	468.56	467.56	556.71	409.10	509.98	14.15
180	439.57	85.94	121.15	455.19	451.47	550.12	411.52	499.88	13.68
190	427.70	85.22	119.62	441.03	437.81	542.37	412.70	490.83	13.28
200	419.54	85.15	118.17	430.07	426.24	534.40	413.48	481.36	12.90
210	412.13	85.10	117.30	419.55	416.80	527.60	413.62	473.07	12.55
220	401.86	84.72	115.98	404.76	409.98	521.29	413.41	465.84	12.18
230	393.65	84.64	114.91	394.82	404.44	514.33	411.14	460.01	11.85
240	389.97	84.62	114.17	390.24	398.72	507.61	408.91	453.63	11.48
250	382.66	84.23	113.34	382.82	394.54	501.20	406.69	447.41	11.15
260	378.22	84.03	112.41	375.81	391.46	494.36	404.69	442.45	10.83
270	372.57	83.52	111.77	368.82	388.43	486.24	402.50	437.19	10.50
280	367.14	83.55	111.11	365.47	384.67	477.36	399.81	432.04	10.18

Elapsed Time (min)	Flue temp °F	Room temp °F	Tunnel dry bulb °F	top °F	back °F	right °F	left °F	bottom °F	scale lbs
290	363.35	83.65	110.65	362.82	381.12	470.43	397.25	421.73	9.85
300	357.11	83.40	109.95	356.02	378.19	464.21	394.02	408.97	9.58
310	292.24	84.23	100.99	325.64	348.19	404.28	313.15	323.77	12.35
320	288.63	84.16	100.60	322.20	344.81	401.64	311.52	321.88	12.14
330	285.02	83.85	100.15	317.92	341.38	398.94	310.11	320.35	11.92
340	283.35	83.86	99.84	311.06	338.20	396.00	308.25	317.79	11.72
350	281.51	83.90	99.52	306.62	335.94	393.55	305.90	314.57	11.52
360	280.50	83.47	99.25	303.24	333.02	391.93	303.94	310.88	11.32
370	278.95	83.45	99.05	300.40	330.48	390.57	301.60	307.38	11.12
380	276.53	83.31	98.64	299.21	327.96	389.32	300.39	304.04	10.92
390	275.77	83.15	98.40	297.35	325.50	387.95	299.02	301.48	10.74
400	273.53	83.00	98.20	294.38	323.67	386.47	297.37	298.18	10.55
410	272.65	82.84	98.07	292.68	322.21	385.25	295.75	294.56	10.34
420	271.73	82.76	97.86	290.19	321.75	384.26	294.05	291.19	10.17
430	270.22	82.82	97.52	287.73	321.35	383.35	292.61	288.16	9.98
440	269.14	82.87	97.45	285.10	319.85	382.25	289.47	285.30	9.81
450	267.15	82.75	97.01	282.66	319.08	380.55	287.54	282.63	9.66
460	265.80	82.51	96.92	280.05	317.21	378.65	284.83	280.13	9.49
470	261.81	82.55	96.60	277.44	314.56	376.55	282.09	277.50	9.33
480	257.25	82.22	96.17	271.27	310.64	373.69	279.60	274.79	9.19
490	253.16	82.36	95.74	265.44	305.16	369.56	276.92	271.93	9.05
500	250.05	82.25	95.40	260.33	299.91	364.84	273.68	268.59	8.91
510	246.16	82.13	94.94	255.59	295.35	360.10	270.88	266.11	8.76
520	242.08	81.95	94.58	250.41	290.45	355.38	268.20	263.11	8.64
530	239.20	81.80	94.24	246.30	285.24	350.72	265.98	259.91	8.50
540	236.71	81.80	93.88	242.67	280.98	346.38	263.44	256.84	8.39
550	233.55	81.69	93.53	238.93	276.05	342.34	260.96	253.71	8.27
560	230.51	81.53	93.12	235.17	271.60	338.26	258.99	250.65	8.15
570	228.01	81.06	92.82	232.22	267.86	334.16	257.41	247.95	8.03
580	226.63	81.36	92.56	230.08	264.15	330.41	256.02	245.70	7.91
590	224.78	80.93	92.32	227.50	260.64	326.94	254.03	244.18	7.79

Elapsed Time (min)	Flue temp °F	Room temp °F	Tunnel dry bulb °F	top °F	back °F	right °F	left °F	bottom °F	scale lbs
600	222.14	81.10	91.98	224.09	256.74	323.43	252.64	242.66	7.69
610	220.11	80.71	91.84	221.82	252.59	320.20	251.08	240.92	7.58
620	217.42	80.60	91.48	218.83	248.40	316.99	249.68	238.96	7.46
630	214.97	80.79	91.22	215.94	244.90	313.73	248.76	236.91	7.36
640	212.69	80.63	90.90	212.91	241.40	310.34	247.37	234.59	7.26
650	210.88	80.33	90.69	210.17	238.00	306.86	245.90	232.61	7.17
660	209.48	80.31	90.46	208.33	234.78	303.59	244.97	230.50	7.06
670	207.85	80.27	90.26	207.68	232.24	300.40	243.29	228.54	6.97
680	204.37	80.18	89.87	204.02	229.45	296.70	241.82	225.89	6.88

June 2nd, 2016

Elapsed Time (min)	Flue temp °F	Room temp °F	Tunnel dry bulb °F	top °F	back °F	right °F	left °F	bottom °F	scale lbs
0	257.07	79.25	90.99	260.76	291.62	366.80	344.69	301.64	5.71
10	718.72	80.07	106.94	747.45	290.29	367.86	333.09	299.74	52.51
20	753.83	81.72	109.59	874.94	326.56	378.71	324.39	349.74	47.36
30	728.65	82.74	108.61	857.37	358.06	391.78	320.93	378.49	43.49
40	753.46	83.64	108.90	879.90	382.62	400.08	318.02	401.87	39.39
50	757.36	83.50	109.29	882.87	410.37	410.91	314.26	425.13	35.33
60	754.74	84.34	109.54	872.87	435.87	422.95	313.67	447.11	31.49
70	758.33	84.98	110.30	891.53	459.77	437.36	316.37	468.64	27.82
80	644.64	85.05	102.94	833.26	479.63	453.89	324.12	487.82	24.74
90	571.04	83.65	99.92	800.59	470.43	454.40	337.54	476.77	23.09
100	539.78	83.59	97.13	780.40	450.53	448.37	345.51	455.24	21.65
110	519.57	83.29	96.77	749.10	435.13	447.51	348.13	440.23	20.23
120	489.25	83.73	95.16	647.45	425.20	451.44	347.80	428.36	18.97
130	484.27	83.69	94.19	633.41	408.83	453.26	347.06	424.93	17.79
140	464.08	83.10	94.02	609.45	396.41	455.76	344.90	424.18	16.70
150	441.94	82.82	93.81	562.74	388.14	459.17	345.29	416.97	15.82

Elapsed Time (min)	Flue temp °F	Room temp °F	Tunnel dry bulb °F	top °F	back °F	right °F	left °F	bottom °F	scale lbs
160	427.06	82.69	92.52	535.07	382.29	459.75	344.66	411.28	15.05
170	376.08	82.60	91.57	469.56	375.25	461.42	344.00	399.75	14.58
180	350.11	82.08	90.21	437.13	368.17	459.61	344.67	385.89	14.24
190	330.16	81.98	89.80	406.12	361.37	452.40	346.31	374.31	13.96
200	317.73	81.65	88.50	387.58	354.22	444.72	346.89	364.79	13.73
210	306.96	81.57	88.22	373.30	347.67	438.09	347.69	356.44	13.48
220	299.26	81.20	88.13	361.95	341.79	433.08	348.64	350.24	13.24
230	292.31	80.64	87.45	351.96	335.90	429.32	349.51	344.18	13.02
240	287.34	80.76	87.15	344.53	331.02	426.53	350.11	339.39	12.78
250	285.15	80.89	86.91	340.31	326.52	425.28	351.08	334.60	12.55
260	279.89	80.96	86.76	332.76	323.30	423.63	350.63	331.42	12.33
270	274.86	80.64	86.79	325.80	319.36	420.17	347.25	328.59	12.11
280	272.25	80.67	86.28	320.88	315.70	416.66	341.90	324.50	11.91
290	268.20	80.74	85.82	316.03	311.75	413.04	336.53	320.47	11.70
300	265.18	80.53	85.48	311.80	307.84	409.53	332.15	317.16	11.51
310	262.75	80.67	85.89	307.16	304.68	406.05	328.27	312.68	11.32
320	259.39	80.39	85.49	303.23	301.45	402.62	324.95	309.14	11.13
330	257.83	80.27	85.61	299.88	298.56	399.46	321.94	305.30	10.95
340	256.46	80.34	85.31	297.27	294.61	396.46	319.78	302.67	10.77
350	255.06	80.11	85.50	294.66	291.68	393.56	316.67	299.94	10.58
360	252.81	80.23	84.94	291.70	287.65	390.78	315.17	298.30	10.42
370	250.90	80.15	85.23	286.79	284.54	388.15	314.25	296.07	10.25
380	248.25	80.13	84.78	282.63	281.54	385.94	311.32	293.80	10.09
390	246.90	79.80	84.64	279.38	278.87	383.57	307.08	291.22	9.92
400	245.51	79.97	84.72	277.14	276.86	380.96	304.20	288.42	9.75
410	244.50	80.00	84.52	274.71	274.96	378.38	301.93	286.40	9.59
420	242.18	80.12	84.33	272.36	273.83	375.82	300.17	284.21	9.44
430	240.72	79.89	84.32	269.85	271.95	373.65	297.80	282.31	9.27
440	239.67	79.67	84.10	267.44	269.58	371.77	295.43	280.55	9.13
450	238.76	79.67	84.09	265.53	267.53	369.86	292.79	278.83	8.96
460	237.79	79.63	83.62	263.64	265.57	368.08	289.86	277.14	8.82

Elapsed Time (min)	Flue temp °F	Room temp °F	Tunnel dry bulb °F	top °F	back °F	right °F	left °F	bottom °F	scale lbs
470	236.74	79.73	83.91	262.22	263.85	366.42	285.68	275.41	8.67
480	235.36	79.60	83.65	260.14	261.76	364.57	281.33	273.80	8.53
490	233.31	79.56	83.49	257.40	259.61	362.26	277.50	271.94	8.39
500	231.86	79.51	83.65	254.49	257.57	358.99	274.66	270.41	8.25
510	230.21	79.51	82.86	251.69	255.36	355.54	271.71	269.26	8.12
520	227.36	79.32	83.60	246.48	253.46	352.07	268.61	267.31	7.99
530	224.57	78.93	82.98	241.92	249.95	348.12	264.92	265.41	7.88
540	222.46	79.29	82.83	238.23	245.81	343.65	261.09	263.63	7.77
550	217.97	79.21	82.97	233.49	242.63	338.22	257.96	261.43	7.66
560	212.45	79.22	82.45	226.45	238.90	331.18	255.10	258.25	7.59
570	207.12	79.16	82.72	219.64	234.81	322.87	251.88	254.75	7.50
580	202.58	78.81	82.21	213.70	230.04	314.49	249.42	250.48	7.42
590	198.78	78.79	82.30	208.61	225.33	306.52	246.97	246.02	7.35
600	195.27	78.71	82.27	204.66	220.66	299.31	245.22	241.66	7.27
610	191.98	78.78	81.97	200.74	216.31	292.76	242.99	237.35	7.20
620	189.05	78.62	81.36	197.49	212.09	286.72	240.41	233.43	7.12
630	186.63	78.65	81.35	194.40	208.09	281.30	237.77	229.68	7.05
640	184.28	78.67	81.94	191.92	204.06	276.41	235.72	226.29	6.98
650	182.28	78.49	81.43	189.35	200.62	272.08	233.81	222.51	6.90
660	180.47	78.44	81.46	187.25	196.77	268.11	231.91	219.21	6.83
670	178.66	78.42	81.41	184.84	193.72	264.43	230.11	216.29	6.77
680	176.57	78.47	80.81	182.39	190.49	260.96	228.18	213.26	6.72
690	174.29	78.41	81.14	179.58	187.67	257.68	226.46	210.06	6.64
700	171.91	78.29	81.14	176.15	184.76	254.57	224.71	206.71	6.59
710	168.65	78.14	80.94	172.58	181.95	251.26	223.36	203.16	6.54
720	166.32	78.14	80.93	169.73	179.21	248.05	221.99	198.62	6.49
730	163.95	78.19	80.42	166.94	176.57	244.83	221.05	194.14	6.44
740	161.55	78.05	80.75	164.33	173.89	241.28	219.98	190.41	6.39
750	159.13	77.84	80.68	161.73	171.44	237.61	218.46	186.59	6.35
760	156.78	77.77	80.44	159.17	168.86	233.98	217.40	182.79	6.31
770	154.41	77.64	79.75	156.92	166.58	230.47	216.23	179.65	6.27

Elapsed Time (min)	Flue temp °F	Room temp °F	Tunnel dry bulb °F	top °F	back °F	right °F	left °F	bottom °F	scale lbs
780	152.79	77.61	80.02	155.25	164.28	227.06	214.91	176.49	6.23
790	150.70	77.70	81.86	153.65	162.33	223.82	213.62	174.05	6.19
800	150.30	77.81	81.58	153.75	160.43	221.11	212.28	171.44	6.14
810	148.65	77.70	81.56	152.44	159.08	218.81	211.36	169.31	6.09
820	146.04	77.71	81.14	149.32	157.77	216.32	210.28	167.02	6.06
830	143.01	77.67	80.98	146.17	155.90	213.14	209.00	164.50	6.03
840	140.36	77.72	80.97	143.16	153.53	209.50	207.96	161.93	6.01
850	137.54	77.74	80.78	140.66	151.41	205.68	207.06	159.01	5.98
860	135.55	77.62	80.50	138.34	149.12	201.97	206.23	156.25	5.96
870	133.16	77.51	80.39	135.98	146.89	198.37	205.39	153.78	5.93
880	130.85	77.53	80.15	133.64	144.80	194.78	204.70	151.41	5.92
890	128.67	77.40	80.06	131.40	142.70	191.26	203.77	149.04	5.91
900	126.52	77.38	79.91	129.18	140.70	187.82	203.00	146.58	5.89
910	124.49	77.34	79.72	127.18	138.76	184.48	202.30	144.33	5.87
920	122.53	77.32	79.68	125.24	136.88	181.26	201.55	142.34	5.86
930	120.81	77.31	79.56	123.43	135.15	178.20	200.82	140.18	5.84
940	119.22	77.38	79.45	121.71	133.47	175.28	200.03	138.07	5.83
950	117.44	77.39	79.28	120.10	131.86	172.50	199.41	136.24	5.82
960	115.97	77.46	79.15	118.58	130.36	169.85	198.89	134.50	5.81
970	114.49	77.46	79.13	117.21	128.90	167.36	198.09	132.85	5.80
980	113.21	77.52	79.26	115.89	127.55	165.00	197.33	131.29	5.79
990	112.05	77.68	79.27	114.88	126.32	162.80	196.23	129.58	5.78

For Usable Firebox Volumes above 3.0 ft^3 - Low and Medium Fire

Nominal Required Load Density (wet basis)	12	lb/ft^3				
Usable Firebox Volume	4.28	ft^3				
Total Nom. Load Wt. Target	51.312	lb				
Total Load Wt. Allowable Range	48.75	to	53.88	lb		
Core Target Wt. Allowable Range	23.09	to	33.35	lb		
Remainder Load Wt. Allowable Range	17.96	to	28.22	lb		
						Mid-Point
Core Load Fuel Pc. Wt. Allowable Range	7.70	to	12.83	lb		10.26
Remainder Load Pc. Wt. Allowable Range	5.13	to	10.26	lb		7.70
	Pc. #					
Core Load Piece Wt. Actual	1	7.92	lb	In Range		
	2	8.27	lb	In Range		
	3	10.40	lb	In Range		
Core Load Total. Wt. Actual		26.59	lb	In Range		
	Pc. #					
Remainder Load Piece Wt.	1	5.61	lb	In Range		
(3 or 4 Pcs.)	2	5.13	lb	In Range		
	3	5.81	lb	In Range		
	4	8.08	lb	In Range		
Remainder Load Piece Weight Ratio - Small/Large		64%		In Range		≤ 67%
Remainder Load Tot. Wt. Act		24.63	lb	In Range		
Total Load Wt. Actual		51.22	lb	In Range		
Core % of Total Wt.		52%		In Range		45-65%
Remainder % of Total Wt.		48%		In Range		35-55%
Actual Load % of Nominal Target		100%		In Range		95-105%
Actual Fuel Load Density		12.0	lb/ft^3			
Allowable Charcoal Bed Wt. Range (lb)	5.2	to	10.2			Mid-Point
Actual Charcoal Bed Wt.		5.5	lb	In Range		7.7
Actual Fuel Load Ending Wt.		0.0	lb	Valid Test		≥ 90%
Total Wt. of Fuel Burned During Test Run lb.		51.2	lb			

Fuel Piece Moisture Reading (%-dry basis)

1	2	3	Ave.		Pc. Wt. Dry Basis			
22.4	22.4	22.4	22.4	In Range	6.47	lb	2.94	kg
22.3	22.3	22.3	22.3	In Range	6.77	lb	3.07	kg
23.2	23.2	23.2	23.2	In Range	8.44	lb	3.83	kg
18.9	18.9	18.9	18.9	In Range	4.72	lb	2.14	kg
20.7	20.7	20.7	20.7	In Range	4.25	lb	1.93	kg
22	22	22	22.0	In Range	4.76	lb	2.16	kg
20.7	20.7	20.7	20.7	In Range	6.69	lb	3.03	kg
Total Load Ave. MC % (dry basis)			21.7	In Range				
Total Load Ave. MC % (wet basis)			17.8					
Total Test Load Weight (dry basis) →					42.10	lb	16.06	kg
Total Fuel Weight Burned During Test Run (dry basis)					42.1	lb	19.09	kg

For Usable Firebox Volumes above 3.0 ft^3 - Low and Medium Fire

Nominal Required Load Density (wet basis)	12	lb/ft^3				
Usable Firebox Volume	4.28	ft^3				
Total Nom. Load Wt. Target	51.312	lb				
Total Load Wt. Allowable Range	48.75	to	53.88	lb		
Core Target Wt. Allowable Range	23.09	to	33.35	lb		
Remainder Load Wt. Allowable Range	17.96	to	28.22	lb		
						Mid-Point
Core Load Fuel Pc. Wt. Allowable Range	7.70	to	12.83	lb		10.26
Remainder Load Pc. Wt. Allowable Range	5.13	to	10.26	lb		7.70
	Pc. #					
Core Load Piece Wt. Actual	1	8.81	lb	In Range		
	2	8.56	lb	In Range		
	3	7.58	lb	Out of Range		
Core Load Total. Wt. Actual		24.95	lb	In Range		
	Pc. #					
Remainder Load Piece Wt.	1	5.46	lb	In Range		
(3 or 4 Pcs.)	2	6.32	lb	In Range		
	3	6.33	lb	In Range		
	4	9.15	lb	In Range		
Remainder Load Piece Weight Ratio - Small/Large		60%		In Range		≤ 67%
Remainder Load Tot. Wt. Act		27.25	lb	In Range		
Total Load Wt. Actual		52.19	lb	In Range		
Core % of Total Wt.		48%		In Range		45-65%
Remainder % of Total Wt.		52%		In Range		35-55%
Actual Load % of Nominal Target		102%		In Range		95-105%
Actual Fuel Load Density		12.2	lb/ft^3			
Allowable Charcoal Bed Wt. Range (lb)	5.3	to	10.4			Mid-Point
Actual Charcoal Bed Wt.		5.5	lb	In Range		7.8
Actual Fuel Load Ending Wt.		0.0	lb	Valid Test		≥ 90%
Total Wt. of Fuel Burned During Test Run lb.		52.2	lb			

Fuel Piece Moisture Reading (%-dry basis)

1	2	3	Ave.		Pc. Wt. Dry Basis			
25.6	23.5	23.8	24.3	In Range	7.09	lb	3.21	kg
20.7	23.5	24.2	22.8	In Range	6.97	lb	3.16	kg
20	30	25	25.0	In Range	6.06	lb	2.75	kg
14.7	20.8	21.8	19.1	In Range	4.58	lb	2.08	kg
17.8	32.7	21.5	24.0	In Range	5.09	lb	2.31	kg
20.9	18.1	29.7	22.9	In Range	5.15	lb	2.33	kg
20.7	23.2	22.1	22.0	In Range	7.50	lb	3.40	kg
Total Load Ave. MC % (dry basis)			23.0	In Range				
Total Load Ave. MC % (wet basis)			18.7					
Total Test Load Weight (dry basis) →					42.44	lb	15.85	kg
Total Fuel Weight Burned During Test Run (dry basis)					42.4	lb	19.25	kg

For Usable Firebox Volumes above 3.0 ft^3 - Low and Medium Fire

Nominal Required Load Density (wet basis)	12	lb/ft^3				
Usable Firebox Volume	4.28	ft^3				
Total Nom. Load Wt. Target	51.312	lb				
Total Load Wt. Allowable Range	48.75	to	53.88	lb		
Core Target Wt. Allowable Range	23.09	to	33.35	lb		
Remainder Load Wt. Allowable Range	17.96	to	28.22	lb		
						Mid-Point
Core Load Fuel Pc. Wt. Allowable Range	7.70	to	12.83	lb		10.26
Remainder Load Pc. Wt. Allowable Range	5.13	to	10.26	lb		7.70
	Pc. #					
Core Load Piece Wt. Actual	1	8.35	lb	In Range		
	2	9.56	lb	In Range		
	3	8.28	lb	In Range		
Core Load Total. Wt. Actual		26.19	lb	In Range		
	Pc. #					
Remainder Load Piece Wt.	1	5.20	lb	In Range		
(3 or 4 Pcs.)	2	6.39	lb	In Range		
	3	8.80	lb	In Range		
	4	5.55	lb	In Range		
Remainder Load Piece Weight Ratio - Small/Large		59%		In Range		≤ 67%
Remainder Load Tot. Wt. Act		25.94	lb	In Range		
Total Load Wt. Actual		52.12	lb	In Range		
Core % of Total Wt.		50%		In Range		45-65%
Remainder % of Total Wt.		50%		In Range		35-55%
Actual Load % of Nominal Target		102%		In Range		95-105%
Actual Fuel Load Density		12.2	lb/ft^3			
Allowable Charcoal Bed Wt. Range (lb)	5.3	to	10.4			Mid-Point
Actual Charcoal Bed Wt.		5.5	lb	In Range		7.8
Actual Fuel Load Ending Wt.		0.0	lb	Valid Test		≥ 90%
Total Wt. of Fuel Burned During Test Run lb.		52.1	lb			

Fuel Piece Moisture Reading (%-dry basis)

1	2	3	Ave.		Pc. Wt. Dry Basis			
24.1	13	17.1	18.1	In Range	7.07	lb	3.21	kg
27.6	25.9	21.9	25.1	In Range	7.64	lb	3.47	kg
23.2	25.2	23.7	24.0	In Range	6.67	lb	3.03	kg
25.2	14.6	16.7	18.8	In Range	4.37	lb	1.98	kg
16.4	20.7	18.1	18.4	In Range	5.39	lb	2.45	kg
24.9	16.7	29.3	23.6	In Range	7.12	lb	3.23	kg
33	27	22.7	27.6	In Range	4.35	lb	1.97	kg
Total Load Ave. MC % (dry basis)			22.3	In Range				
Total Load Ave. MC % (wet basis)			18.2					
Total Test Load Weight (dry basis) →					42.62	lb	17.36	kg
Total Fuel Weight Burned During Test Run (dry basis)					42.6	lb	19.33	kg

For Usable Firebox Volumes above 3.0 ft^3 - Low and Medium Fire

Nominal Required Load Density (wet basis)	12	lb/ft^3				
Usable Firebox Volume	4.28	ft^3				
Total Nom. Load Wt. Target	51.312	lb				
Total Load Wt. Allowable Range	48.75	to	53.88	lb		
Core Target Wt. Allowable Range	23.09	to	33.35	lb		
Remainder Load Wt. Allowable Range	17.96	to	28.22	lb		
						Mid-Point
Core Load Fuel Pc. Wt. Allowable Range	7.70	to	12.83	lb		10.26
Remainder Load Pc. Wt. Allowable Range	5.13	to	10.26	lb		7.70
	Pc. #					
Core Load Piece Wt. Actual	1	8.06	lb	In Range		
	2	8.40	lb	In Range		
	3	7.70	lb	In Range		
Core Load Total. Wt. Actual		24.15	lb	In Range		
	Pc. #					
Remainder Load Piece Wt.	1	5.94	lb	In Range		
(3 or 4 Pcs.)	2	5.64	lb	In Range		
	3	8.79	lb	In Range		
	4	7.37	lb	In Range		
Remainder Load Piece Weight Ratio - Small/Large		64%		In Range		≤ 67%
Remainder Load Tot. Wt. Act		27.73	lb	In Range		
Total Load Wt. Actual		51.88	lb	In Range		
Core % of Total Wt.		47%		In Range		45-65%
Remainder % of Total Wt.		53%		In Range		35-55%
Actual Load % of Nominal Target		101%		In Range		95-105%
Actual Fuel Load Density		12.1	lb/ft^3			
Allowable Charcoal Bed Wt. Range (lb)	5.2	to	10.3			Mid-Point
Actual Charcoal Bed Wt.		5.5	lb	In Range		7.8
Actual Fuel Load Ending Wt.		0.0	lb	Valid Test		≥ 90%
Total Wt. of Fuel Burned During Test Run lb.		51.9	lb			

Fuel Piece Moisture Reading (%-dry basis)

1	2	3	Ave.		Pc. Wt. Dry Basis			
25.7	25.7	25.7	25.7	In Range	6.41	lb	2.91	kg
23	23	23	23.0	In Range	6.83	lb	3.10	kg
19.3	19.3	19.3	19.3	In Range	6.45	lb	2.93	kg
18	18	18	18.0	In Range	5.03	lb	2.28	kg
21.7	21.7	21.7	21.7	In Range	4.64	lb	2.10	kg
22.5	22.5	22.5	22.5	In Range	7.17	lb	3.25	kg
22.1	22.1	22.1	22.1	In Range	6.03	lb	2.74	kg
Total Load Ave. MC % (dry basis)			21.9	In Range				
Total Load Ave. MC % (wet basis)			18.0					
Total Test Load Weight (dry basis) →					42.56	lb	16.57	kg
Total Fuel Weight Burned During Test Run (dry basis)					42.6	lb	19.30	kg

VERSION: 2.4 2010-04-15

Manufacturer: SBI
Model: FP-15 Series
Date: 2016-06-08
Run: 1
Control #: QC20160608
Test Duration: 250
Output Category: High

Appliance Type: Non-cat (Cat, Non
Temp. Units F (F or C)
Weight Units lb (kg or lb)

Fuel Data

	Beech	
HHV	18,800	kJ/kg
%C	48.7	
%H	5.8	
%O	44.9	
%Ash	0.6	

Wood Moisture (% wet): 17.89
Load Weight (lb wet): 43.22
Burn Rate (dry kg/h): 3.86
Total Particulate Emissions: 15.415 g

Averages		**0.33**	**7.85**	**13.06**	**598.06**	**83.54**
					Temp. (ºF)	
Elapsed Time (min)	**Fuel Weight Remaining (lb)**	**Flue Gas Composition (%) CO**	**CO_2**	**O_2**	**Flue Gas**	**Room Temp**
0	43.22	0.21	6.42	12.44	600.3	82.4
10	39.55	2.24	12.61	5.96	739.2	81.3
20	33.85	1.49	15.54	5.31	847.5	82.8
30	28.60	0.75	15.16	6.39	893.7	83.9
40	24.13	0.59	14.94	6.44	888.5	84.1
50	19.95	0.21	14.33	7.42	877.4	85.3
60	16.34	0.16	13.84	7.57	838.7	85.6
70	13.14	0.02	12.27	9.22	807.1	85.8
80	10.64	0.02	11.48	9.73	763.4	85.9
90	8.51	0.01	10.04	11.10	732.1	86.0
100	6.91	0.01	9.06	12.08	685.6	86.6
110	5.61	0.02	8.16	13.03	647.9	85.9
120	4.57	0.03	7.56	13.62	615.6	85.0
130	3.73	0.05	6.54	14.60	585.0	84.5
140	3.12	0.14	5.55	15.40	544.6	83.8
150	2.67	0.27	5.38	15.47	508.6	83.3
160	2.29	0.33	4.63	16.39	484.3	82.8
170	1.95	0.34	4.22	16.63	449.1	83.3
180	1.63	0.35	4.10	16.69	429.1	82.5
190	1.29	0.25	3.69	17.27	414.7	82.1
200	1.02	0.22	3.34	17.62	396.1	81.6
210	0.80	0.21	3.18	17.64	379.5	82.0
220	0.55	0.20	3.22	17.68	368.1	81.6
230	0.31	0.20	3.08	17.80	359.2	81.5
240	0.05	0.20	2.95	17.95	352.1	81.4
250	-0.16	0.17	2.71	18.22	342.2	81.0

Manufacturer: SBI
Model: FP-15 Series
Date: 06-08-16
Run: 1
Control #: QC20160608
Test Duration: 250 min

	HHV	LHV
Eff	62.37%	66.82%
Comb Eff	95.92%	95.92%
HT Eff	65.03%	69.66%
Output	45,315	kJ/h
Burn Rate	3.86	kg/h
Grams CO	911	g
Input	72,650	kJ/h
MC wet	17.89	

Note: In the "Input data", "Calc. % O_2", "Fuel Properties", and "Mass Balance" columns, [e], [d], [g], [a], [b], [c], [h], [u], [w], [j], and [k] refer to their respective variables in Clauses 13.7.3 to 13.7.5.

Ultimate CO_2
$CO_{2\text{-ult}}$ 20.77
F_0 1.003

Overall Heating Efficiency: 62.37%
Combustion Efficiency: 95.92%
Heat Transfer Efficiency: 65.03%

Air Fuel Ratio (A/F)	
Dry Molecular Weight (M_d)	29.77
Dry Moles Exhaust Gas (N_t):	447.40
Air Fuel Ratio (A/F)	12.81

%HC 1.32

Heat Output: 42,987 Btu/h 45,315 kJ/h
Heat Input: 68,917 Btu/h 72,650 kJ/h
Burn Duration: 4.17 h
Burn Rate: 8.52 lb/h 3.864 kg/h
Stack Temp: 598.0 Deg. F 314.4 Deg. C

Combustion Efficiency: 95.92%
Total Input (kJ): 302,710 287,106 (Btu)
Total Output (kJ): 188,814 179,081 (Btu)
Efficiency: 62.37%
Total CO (g): 910.66

Moisture of Wood (wet basis): 17.89
Initial Dry Weight Wt_{do} (kg): 16.10
Moisture Content Dry 21.79

Moisture Content M_{Cwb}: 17.89
Dry kg : 16.10
CA: 48.7
HY: 5.8
OX: 44.9

Load Weight (kg): 19.61

Fuel Heating Value in kJ/kg - CV:	HHV	LHV		HHV	LHV
	18,800	17,549	Btu/lb	8088.0	7549.9

Elapsed Time	Weight Remaining (kg)	% CO [e]	% CO_2 [d]	Excess Air EA	Total O_2	Calc. % O_2 [g]	Flue Gas (°C)	Room Temp (°C)	Combust Eff %	Heat Transfer %	Net Eff %	Air Fuel Ratio	Wet Wt Now Wt	% Wet Consumed x	Dry Wt. Now Wt_{dn}	% Dry Consumed y	Total Input
	Averages	0.33	7.85	2.53	20.87	12.86	314.48	28.63	97.0%	61.0%	59.2%	19.98	4.79	75.59	3.93	75.59	302346
0	19.61	0.21	6.42	213.4%	20.89	14.36	315.7	28.0	97.9%	58.6%	57.4%	17.7	19.61	0.00	16.10	0.00	0
10	17.95	2.24	12.61	39.9%	20.82	7.09	392.9	27.4	87.2%	67.2%	58.6%	7.7	17.95	8.48	14.74	8.48	45636
20	15.36	1.49	15.54	22.0%	20.80	4.52	453.1	28.2	92.5%	67.6%	62.5%	6.8	15.36	21.67	12.61	21.67	38357
30	12.98	0.75	15.16	30.6%	20.81	5.28	478.7	28.8	96.0%	65.9%	63.2%	7.3	12.98	33.82	10.66	33.82	34067
40	10.95	0.59	14.94	33.8%	20.82	5.58	475.8	29.0	96.8%	65.8%	63.7%	7.5	10.95	44.18	8.99	44.18	30290
50	9.05	0.21	14.33	42.9%	20.82	6.39	469.7	29.6	98.9%	65.4%	64.7%	8.1	9.05	53.84	7.43	53.84	27256
60	7.42	0.16	13.84	48.4%	20.83	6.91	448.1	29.8	99.1%	66.1%	65.5%	8.4	7.42	62.19	6.09	62.19	23855
70	5.96	0.02	12.27	69.0%	20.84	8.56	430.6	29.9	100.0%	64.8%	64.8%	9.6	5.96	69.60	4.90	69.60	19973
80	4.83	0.02	11.48	80.7%	20.85	9.36	406.3	29.9	100.1%	65.0%	65.1%	10.3	4.83	75.38	3.96	75.38	16218
90	3.86	0.01	10.04	106.7%	20.86	10.81	388.9	30.0	100.2%	63.4%	63.5%	11.7	3.86	80.31	3.17	80.31	13058
100	3.14	0.01	9.06	129.1%	20.87	11.80	363.1	30.3	100.3%	63.1%	63.3%	13.0	3.14	84.01	2.57	84.01	10139
110	2.55	0.02	8.16	154.0%	20.87	12.71	342.2	29.9	100.3%	62.4%	62.6%	14.4	2.55	87.01	2.09	87.01	8211
120	2.07	0.03	7.56	173.6%	20.88	13.30	324.2	29.4	100.1%	62.2%	62.3%	15.5	2.07	89.43	1.70	89.43	6607
130	1.69	0.05	6.54	215.3%	20.89	14.32	307.2	29.2	100.0%	60.2%	60.2%	17.9	1.69	91.38	1.39	91.38	5051
140	1.42	0.14	5.55	265.1%	20.89	15.27	284.8	28.8	98.6%	58.2%	57.4%	20.7	1.42	92.77	1.16	92.77	3684
150	1.21	0.27	5.38	267.8%	20.90	15.38	264.8	28.5	96.6%	59.9%	57.9%	20.8	1.21	93.81	1.00	93.81	2922
160	1.04	0.33	4.63	319.0%	20.90	16.11	251.3	28.2	95.2%	57.5%	54.7%	23.6	1.04	94.70	0.85	94.70	2524
170	0.89	0.34	4.22	355.8%	20.90	16.51	231.7	28.5	94.6%	57.8%	54.7%	25.7	0.89	95.48	0.73	95.48	2292
180	0.74	0.35	4.10	367.1%	20.90	16.63	220.6	28.1	94.3%	58.7%	55.4%	26.3	0.74	96.22	0.61	96.22	2310
190	0.59	0.25	3.69	426.7%	20.91	17.09	212.6	27.9	95.6%	56.9%	54.4%	29.8	0.59	97.00	0.48	97.00	2162
200	0.46	0.22	3.34	484.0%	20.91	17.46	202.3	27.6	96.1%	55.7%	53.5%	33.0	0.46	97.65	0.38	97.65	1747
210	0.36	0.21	3.18	513.6%	20.91	17.63	193.0	27.8	96.2%	56.1%	53.9%	34.7	0.36	98.16	0.30	98.16	1634
220	0.25	0.20	3.22	508.1%	20.91	17.59	186.7	27.5	96.5%	57.7%	55.7%	34.4	0.25	98.72	0.21	98.72	1707
230	0.14	0.20	3.08	533.1%	20.91	17.73	181.8	27.5	96.2%	57.4%	55.2%	35.9	0.14	99.29	0.11	99.29	1747
240	0.02	0.20	2.95	559.7%	20.91	17.87	177.8	27.5	96.1%	56.9%	54.7%	37.4	0.02	99.88	0.02	99.88	1263
250	-0.07	0.17	2.71	621.9%	20.92	18.12	172.3	27.2	96.7%	55.4%	53.6%	41.0	-0.07	100.36	-0.06	100.36	-364

(INPUT DATA: Elapsed Time – % CO_2 [d]; Oxygen Calculation: Excess Air EA – Calc. % O_2 [g]; Input Data: Flue Gas – Room Temp)

Elapsed Time	Fuel Properties: Carbon /12= [a]	Hydrogen /1= [b]	Oxygen /16= [c]	Calorific Value	Mw Moisture Fuel Burnt	Mass Balance (moles/100 mole dry flue gas): [h]	[u]	[w]	[j]	[k]	kg Wood per 100 mole dfp Nk	Moles per kg of Dry Wood: CO_2	O_2	CO	HC	N_2	H_2O	Moisture Present	Stack Temp K
	4.06	5.80	2.81	18800.00	17.89	78.96	20.94	2.02	5.81	0.03	0.20	39.00	104.95	1.75	0.08	547.46	29.02	12.10	587.63
0	4.06	5.80	2.81	18800.00	17.89	79.01	20.96	1.63	4.73	0.01	0.16	39.51	88.39	1.28	0.04	486.19	29.09	12.10	588.85
10	4.06	5.80	2.81	18800.00	17.89	78.06	20.71	3.73	10.23	0.29	0.37	34.01	19.14	6.03	0.79	210.55	27.60	12.10	666.04
20	4.06	5.80	2.81	18800.00	17.89	78.45	20.81	4.24	11.92	0.19	0.42	36.83	10.71	3.53	0.46	185.95	28.25	12.10	726.22
30	4.06	5.80	2.81	18800.00	17.89	78.81	20.91	3.94	11.25	0.09	0.39	38.69	13.47	1.91	0.24	201.11	28.70	12.10	751.89
40	4.06	5.80	2.81	18800.00	17.89	78.89	20.93	3.84	11.00	0.07	0.38	39.11	14.61	1.54	0.19	206.50	28.80	12.10	748.97
50	4.06	5.80	2.81	18800.00	17.89	79.07	20.97	3.59	10.37	0.02	0.36	40.19	17.92	0.59	0.05	221.76	29.07	12.10	742.80
60	4.06	5.80	2.81	18800.00	17.89	79.09	20.98	3.45	9.99	0.01	0.34	40.33	20.13	0.46	0.03	230.48	29.11	12.10	721.30
70	4.06	5.80	2.81	18800.00	17.89	79.15	20.99	3.03	8.80	-0.01	0.30	40.79	28.46	0.07	-0.03	263.10	29.24	12.10	703.78
80	4.06	5.80	2.81	18800.00	17.89	79.14	20.99	2.83	8.23	-0.01	0.28	40.81	33.27	0.06	-0.04	281.32	29.26	12.10	679.46
90	4.06	5.80	2.81	18800.00	17.89	79.13	20.99	2.47	7.20	-0.01	0.25	40.84	43.99	0.05	-0.06	321.89	29.29	12.10	662.09
100	4.06	5.80	2.81	18800.00	17.89	79.13	20.99	2.23	6.50	-0.02	0.22	40.87	53.25	0.04	-0.07	356.93	29.32	12.10	636.28
110	4.06	5.80	2.81	18800.00	17.89	79.12	20.99	2.01	5.87	-0.02	0.20	40.82	63.56	0.09	-0.08	395.76	29.34	12.10	615.32
120	4.06	5.80	2.81	18800.00	17.89	79.10	20.98	1.87	5.45	-0.02	0.19	40.73	71.66	0.18	-0.08	426.13	29.34	12.10	597.37
130	4.06	5.80	2.81	18800.00	17.89	79.09	20.98	1.62	4.73	-0.01	0.16	40.62	88.96	0.30	-0.09	491.22	29.36	12.10	580.39
140	4.06	5.80	2.81	18800.00	17.89	79.04	20.96	1.40	4.07	0.00	0.14	39.85	109.69	1.00	-0.03	567.53	29.23	12.10	557.91
150	4.06	5.80	2.81	18800.00	17.89	78.97	20.95	1.40	4.02	0.01	0.14	38.80	110.91	1.94	0.10	569.46	28.98	12.10	537.95
160	4.06	5.80	2.81	18800.00	17.89	78.94	20.94	1.23	3.52	0.02	0.12	37.97	132.07	2.70	0.17	647.27	28.84	12.10	524.43
170	4.06	5.80	2.81	18800.00	17.89	78.93	20.94	1.13	3.23	0.02	0.11	37.63	147.24	3.02	0.19	703.71	28.80	12.10	504.85
180	4.06	5.80	2.81	18800.00	17.89	78.92	20.93	1.10	3.15	0.02	0.11	37.45	151.91	3.18	0.20	720.90	28.77	12.10	493.75
190	4.06	5.80	2.81	18800.00	17.89	78.96	20.95	0.97	2.81	0.01	0.10	38.11	176.50	2.63	0.09	815.47	28.99	12.10	485.78
200	4.06	5.80	2.81	18800.00	17.89	78.98	20.95	0.88	2.54	0.00	0.09	38.30	200.24	2.49	0.04	905.63	29.10	12.10	475.42
210	4.06	5.80	2.81	18800.00	17.89	78.98	20.95	0.83	2.42	0.00	0.08	38.33	212.49	2.48	0.02	951.99	29.14	12.10	466.19
220	4.06	5.80	2.81	18800.00	17.89	78.99	20.95	0.84	2.44	0.00	0.08	38.48	210.26	2.35	0.00	943.92	29.17	12.10	459.88
230	4.06	5.80	2.81	18800.00	17.89	78.99	20.95	0.81	2.34	0.00	0.08	38.32	220.61	2.50	0.01	982.60	29.16	12.10	454.93
240	4.06	5.80	2.81	18800.00	17.89	78.99	20.95	0.78	2.25	0.00	0.08	38.25	231.63	2.58	0.00	1024.04	29.17	12.10	450.99
250	4.06	5.80	2.81	18800.00	17.89	79.00	20.95	0.71	2.06	0.00	0.07	38.51	257.51	2.38	-0.06	1122.48	29.30	12.10	445.49

Elapsed Time	Heat Content Change - Ambient to Stack Temperature, Flue Gas Constituent: CO_2	O_2	CO	N_2	CH_4	H_2O	Room Temp K
	12288.98	8848.83	8506.64	8432.98	12704.87	10148.36	301.78
0	12210.81	8856.95	8530.99	8453.61	########	10182.73	301.17
10	15920.14	11379.08	10917.37	10827.45	########	13017.38	300.53
20	18879.80	13342.45	12761.73	12664.99	########	15203.84	301.39
30	20165.53	14183.23	13548.15	13449.24	########	16135.01	301.97
40	20010.37	14081.15	13452.50	13353.89	########	16021.70	302.12
50	19670.88	13856.18	13241.23	13143.38	########	15771.26	302.74
60	18571.20	13132.48	12563.01	12467.33	########	14967.78	302.94
70	17689.42	12549.15	12015.50	11921.74	########	14318.87	303.01
80	16480.66	11744.47	11258.82	11168.02	########	13421.57	303.08
90	15626.42	11171.91	10719.33	10630.88	########	12781.47	303.16
100	14366.38	10320.85	9915.62	9831.06	########	11827.29	303.47
110	13381.37	9652.66	9283.82	9202.49	########	11076.96	303.08
120	12554.21	9088.39	8749.42	8671.00	########	10442.00	302.59
130	11773.32	8551.84	8240.23	8164.82	########	9836.67	302.32
140	10753.89	7846.72	7569.80	7498.62	########	9039.25	301.91
150	9856.46	7220.91	6973.44	6906.30	9919.28	8329.47	301.67
160	9259.73	6802.59	6574.22	6509.92	9277.46	7854.14	301.38
170	8378.64	6179.45	5978.07	5918.32	8341.82	7143.88	301.65
180	7906.37	5844.89	5657.86	5600.58	7841.51	6762.32	301.22
190	7566.16	5602.79	5425.87	5370.44	7483.48	6485.79	301.00
200	7127.42	5289.52	5125.39	5072.42	7024.09	6127.54	300.70
210	6719.13	4995.80	4843.10	4792.56	6601.39	5790.79	300.95
220	6458.06	4808.27	4662.93	4613.93	6330.50	5575.89	300.69
230	6248.44	4657.05	4517.49	4469.76	6114.38	5402.36	300.63
240	6081.47	4536.37	4401.37	4354.67	5942.74	5263.79	300.60
250	5857.14	4374.32	4245.44	4200.12	5711.97	5077.73	300.35

Elapsed Time	Energy Losses (kJ/kg of Dry Fuel), Flue Gas Constituent: CO_2	O_2	CO	N_2	CH_4	H_2O Comb	H_2O Fuel MC	Total Loss Rate	Total Loss	Chemical Loss 1	Sensible and Latent Loss	Total Output	Chem Loss 2	Grams Produced CO	Grams Produced HC
	SUMS							AVERAGE	SUMS						
	12515.32	17550.46	13186.93	96613.77	1865.50	40818.37	17031.59	7676.23	113896.05	12363.18	101532.9	188450.4	12363.2	910.7	56.8
0	482.41	782.83	373.22	4110.09	37.15	1575.42	655.48	8016.60	0.00	0	0.00	0	0	0.00	0.00
10	541.50	217.74	1772.25	2279.77	711.89	1573.11	689.79	7786.04	18900.23	5839	13061.63	26736	5839	409.84	30.49
20	695.43	142.92	1044.95	2355.06	419.38	1671.84	716.25	7045.83	14375.37	2877	11498.61	23982	2877	201.84	15.04
30	780.10	191.09	565.26	2704.83	216.19	1725.03	727.53	6910.04	12521.61	1360	11161.62	21546	1360	96.72	6.87
40	782.53	205.78	455.49	2757.56	169.13	1727.97	726.15	6824.62	10995.77	967	10029.09	19295	967	69.32	4.78
50	790.55	248.30	173.89	2914.63	47.85	1736.65	723.12	6634.99	9619.22	309	9310.62	17636	309	23.83	1.22
60	749.01	264.41	137.12	2873.53	29.67	1715.64	713.40	6482.77	8225.75	203	8022.33	15629	203	16.48	0.66
70	721.52	357.15	21.38	3136.65	-29.63	1704.35	705.54	6616.96	7029.91	-9	7038.95	12943	-9	2.16	-0.55
80	672.53	390.75	18.30	3141.83	-37.34	1679.10	694.68	6559.84	5658.83	-16	5675.24	10559	-16	1.50	-0.57
90	638.17	491.42	14.22	3421.94	-53.46	1662.39	686.93	6861.61	4765.74	-27	4792.69	8292	-27	0.94	-0.66
100	587.12	549.53	10.31	3509.00	-67.46	1636.18	675.38	6900.06	3721.28	-30	3751.69	6418	-30	0.53	-0.64
110	546.21	613.50	26.90	3641.97	-74.33	1615.02	666.30	7035.57	3072.98	-21	3093.57	5138	-21	1.13	-0.57
120	511.27	651.27	53.91	3694.93	-73.85	1596.34	658.62	7092.49	2492.53	-7	2499.74	4114	-7	1.82	-0.46
130	478.24	760.80	87.37	4010.74	-83.00	1579.68	651.29	7485.11	2011.15	1	2010.35	3040	1	2.26	-0.40
140	428.58	860.67	291.48	4255.72	-25.22	1549.49	641.64	8002.34	1568.33	51	1517.57	2116	51	5.50	-0.09
150	382.38	800.88	561.63	3932.85	86.55	1515.75	633.04	7913.10	1230.00	99	1131.50	1692	99	8.43	0.24
160	351.55	898.42	780.48	4213.66	150.19	1494.64	627.29	8516.24	1143.36	122	1021.00	1381	122	10.13	0.36
170	315.25	909.89	871.36	4164.79	168.53	1472.05	618.69	8520.56	1038.85	124	914.45	1253	124	10.29	0.37
180	296.10	887.91	916.50	4037.46	181.55	1459.58	614.07	8393.18	1031.14	132	898.64	1279	132	10.92	0.40
190	288.32	988.92	758.34	4379.45	82.50	1462.75	610.73	8571.00	985.77	95	890.78	1176	95	8.47	0.17
200	272.97	1059.19	717.91	4593.75	34.09	1457.76	606.39	8742.05	812.28	69	743.62	935	69	6.48	0.06
210	257.53	1061.58	714.32	4562.45	16.50	1449.91	602.32	8664.61	752.89	62	690.44	881	62	6.04	0.03
220	248.50	1010.97	674.78	4355.19	3.04	1445.14	599.71	8337.33	756.84	61	696.30	950	61	5.96	0.00
230	239.42	1027.38	719.64	4392.01	8.24	1439.50	597.61	8423.79	782.81	67	716.23	964	67	6.51	0.01
240	232.60	1050.74	741.11	4459.37	2.69	1436.07	595.94	8518.52	572.27	49	523.06	691	49	4.85	0.00
250	225.53	1126.43	684.84	4714.56	-55.35	1437.00	593.68	8726.70	-168.86	-12	-156.86	-195	-12	-1.29	0.02

Intertek Testing Services NA Inc.

Manufacturer: SBI
Model: FP-15 Series
Date: 06-08-16
Run: 1
Control #: QC20160608
Test Duration: 250
Output Category: High

Technicians: Claude Pelland

Test Results in Accordance with CSA B415.1-10

	HHV Basis	LHV Basis
Overall Efficiency	62.4%	66.8%
Combustion Efficiency	95.9%	95.9%
Heat Transfer Efficiency	65%	69.7%

Output Rate (kJ/h)	45,315	42,987	**(Btu/h)**
Burn Rate (kg/h)	3.86	8.52	**(lb/h)**
Input (kJ/h)	72,650	68,917	**(Btu/h)**

Test Load Weight (dry kg)	16.10	35.49	**dry lb**
MC wet (%)	17.89		
MC dry (%)	21.79		
Particulate (g)	15.415		
CO (g)	911		
Test Duration (h)	4.17		

Emissions	**Particulate**	**CO**
g/MJ Output	0.08	4.82
g/kg Dry Fuel	0.96	56.56
g/h	3.70	218.56
lb/MM Btu Output	0.19	11.21

Air/Fuel Ratio (A/F)	12.81

VERSION: **2.4** **2010-04-15**

VERSION:	2.4	2010-04-15			
Manufacturer:	SBI		**Appliance Type:**	Non-Cat	(Cat, Non
Model:	FP-15 Series				
Date:	2016-06-09		**Temp. Units**	F	(F or C)
Run:	2		**Weight Units**	lb	(kg or lb)
Control #:	QC20160608				
Test Duration:	770				
Output Category:	1		**Fuel Data**		
				Beech	
Wood Moisture (% wet):	18.77		**HHV**	18,800	kJ/kg
Load Weight (lb wet):	51.83		**%C**	48.7	
Burn Rate (dry kg/h):	1.49		**%H**	5.8	
Total Particulate Emissions:	19.145 g		**%O**	44.9	
			%Ash	0.6	

	Averages	**0.51**	**4.84**	**15.69**	**308.78**	**77.67**	
					Temp. (°F)		
Elapsed	**Fuel Weight**	**Flue Gas Composition (%)**			**Flue**	**Room**	
Time (min)	**Remaining (lb)**	**CO**	**CO_2**	**O_2**	**Gas**	**Temp**	
0	51.83	0.29	2.33	17.10	233.3	76.9	
10	47.86	0.94	13.45	7.45	704.6	77.2	
20	42.31	1.46	13.82	7.37	780.6	79.0	
30	37.38	2.15	14.06	6.89	764.5	80.5	
40	32.46	1.98	13.95	6.86	762.0	81.2	
50	27.86	1.88	13.94	6.77	761.8	82.2	
60	23.57	1.27	14.43	6.53	764.4	82.8	
70	20.14	1.73	10.04	11.02	637.1	82.6	
80	18.21	1.33	8.98	11.74	541.0	82.2	
90	16.51	0.94	9.96	11.00	507.9	81.5	
100	14.84	1.82	10.34	10.22	509.3	80.6	
110	13.28	0.58	9.39	11.31	502.3	80.4	
120	12.03	0.63	9.47	11.06	495.5	80.3	
130	10.89	0.57	8.05	12.43	477.7	81.1	
140	10.11	0.50	7.41	12.88	437.5	80.3	
150	9.54	0.58	5.81	14.89	405.3	80.2	
160	9.23	0.60	4.99	15.25	353.5	79.8	
170	8.99	0.55	5.02	15.29	324.5	79.5	
180	8.76	0.53	5.05	15.23	306.6	79.7	
190	8.53	0.50	5.10	15.13	295.3	79.3	
200	8.29	0.51	5.17	15.15	288.7	79.3	
210	8.05	0.49	5.17	15.11	283.6	79.0	
220	7.80	0.47	5.18	15.12	281.2	78.8	
230	7.55	0.46	5.16	15.16	279.7	78.4	
240	7.31	0.45	5.20	15.16	278.0	78.6	
250	7.07	0.45	5.27	15.09	278.2	78.6	
260	6.83	0.43	5.23	15.17	280.1	78.7	
270	6.59	0.42	5.08	15.39	279.3	78.9	
280	6.37	0.44	4.96	15.51	276.3	78.9	
290	6.14	0.43	4.82	15.54	273.5	78.8	
300	5.93	0.41	4.82	15.50	271.7	78.6	
310	5.72	0.43	4.74	15.65	271.3	78.7	
320	5.50	0.41	4.70	15.71	270.8	78.4	
330	5.29	0.40	4.58	15.85	269.8	78.5	
340	5.08	0.39	4.37	16.07	266.5	78.6	
350	4.90	0.37	4.30	16.20	263.6	78.7	
360	4.72	0.36	4.16	16.29	260.3	78.5	
370	4.54	0.37	4.02	16.47	257.5	78.2	
380	4.37	0.38	3.94	16.51	254.4	78.2	
390	4.21	0.39	3.78	16.66	251.8	78.5	
400	4.03	0.36	3.73	16.70	249.5	78.5	
410	3.88	0.35	3.70	16.77	247.5	78.1	
420	3.71	0.35	3.65	16.81	245.6	78.3	
430	3.55	0.34	3.67	16.81	244.4	78.0	
440	3.39	0.33	3.56	16.92	243.6	78.0	
450	3.24	0.33	3.48	17.01	242.2	77.9	
460	3.08	0.31	3.43	17.09	240.7	78.0	
470	2.91	0.32	3.42	17.08	239.3	77.9	
480	2.76	0.31	3.34	17.26	240.1	77.9	
490	2.61	0.3029	3.22	17.37	238.591	77.7273	
500	2.48	0.2989	3.1	17.48	235.762	77.7703	
510	2.34	0.2985	2.91	17.65	233.311	77.7729	
520	2.21	0.2989	2.89	17.65	230.275	77.2326	
530	2.09	0.2884	2.88	17.7	228.403	77.2108	
540	1.95	0.2816	2.85	17.7	227.455	77.1758	
550	1.82	0.2818	2.88	17.67	226.645	76.8662	
560	1.69	0.2614	2.82	17.77	225.424	76.7595	
570	1.56	0.2549	2.75	17.86	224.523	76.532	
580	1.43	0.2489	2.68	17.92	222.712	76.5502	
590	1.32	0.2467	2.58	18.07	220.949	76.7129	
600	1.21	0.2368	2.5	18.12	219.033	76.5991	
610	1.10	0.2327	2.44	18.18	216.716	76.3479	
620	0.99	0.2155	2.22	18.46	214.214	76.1048	
630	0.87	0.2095	2.15	18.51	209.457	73.7699	
640	0.75	0.1989	2.02	18.69	204.904	73.3005	
650	0.66	0.1987	1.95	18.74	199.692	70.7158	
660	0.57	0.1966	1.86	18.83	194.588	72.3042	
670	0.44	0.3862	1.75	18.94	190.672	66.8672	
680	0.30	0.1889	1.73	18.97	185.371	65.2408	
690	0.29	0.1841	1.65	19.04	181.111	73.4056	
700	0.26	0.1802	1.59	19.09	178.485	74.8565	
710	0.23	0.1769	1.59	19.1	175.793	75.3445	
720	0.18	0.1741	1.55	19.15	173.017	75.5004	
730	0.15	0.166	1.48	19.23	170.553	75.5184	
740	0.12	0.162	1.43	19.32	167.441	75.5131	
750	0.08	0.1654	1.42	19.31	164.368	75.422	
760	0.05	0.4232	1.75	17.6	161.921	75.266	
770	0.00	0.3606	2.66	17.76	169.371	75.0965	

Manufacturer: Stll
Model: FR15 Series
Date: 06-09-16
Run: 2
Control #: QC20160608
Test Duration: 770 min

	HHV	LHV
Eff	63.76%	68.39%
Comb Eff	91.73%	91.73%
Ht Eff	69.50%	74.46%
Output	17,842	kJ/h
Burn Rate	1.49	kg/h
Grams CO	2,156	g
Input	27,994	kJ/h
MC wet	18.77	

Note: In the "Input data", "Calc. % O_2", "Fuel Properties" and "Mass Balance" columns, [e], [g], [j], [k], [n], [h], [u], [w], [j], and [k] refer to their respective variables in Clauses 13.7.3 to 13.7.5.

Ultimate CO_2: $CO_{2,ult}$ = 20.77 %
F_0 = 1.000

Air Fuel Ratio (A/F)

Overall Heating Efficiency:	63.76%	Dry Molecular Weight (M$_d$)	29.41
Combustion Efficiency:	91.73%	Dry Moles Exhaust Gas (N$_t$):	6372.62 %HC
Heat Transfer Efficiency:	69.50%	Air Fuel Ratio (A/F)	18.24 1.32

Heat Output: 16,925 Btu/h 17,842 kJ/h
Heat Input: 26,546 Btu/h 27,994 kJ/h

Burn Duration: 12.83 h
Burn Rate: 3.28 lb/h 1.488 kg/h
Stack Temp: 309.8 Deg. F 154.3 Deg. C

Combustion Efficiency: 91.73%
Total Input (kJ): 359,124 340,611 (Btu)
Total Output (kJ): 228,973 217,170 (Btu)
Efficiency: 63.76%
Total CO (g): 2155.65

Moisture Content M_{cwb}: 18.77

Moisture of Wood (w-et basis): 18.77 Dry kg : 19.10
Initial Dry Weight W_{dw} (kg): 19.10 CA: 48.7
Moisture Content Dry 23.11 HY: 5.8
CIX: 44.0

Load Weight (kg): 23.52
Fuel Heating HHV LHV
Value in kJ/kg - CV: 18,800 17,549 Btu/lb 8088.0 7549.9

| | | |

Intertek Testing Services NA, Inc

Manufacturer: SBI
Model: FP-15 Series
Date: 06-09-16
Run: 2
Control #: QC20160608
Test Duration: 770
Output Category: 1

Technicians: Claude Pelland

Test Results in Accordance with CSA B415.1-10

	HHV Basis	LHV Basis
Overall Efficiency	63.8%	68.3%
Combustion Efficiency	91.7%	91.7%
Heat Transfer Efficiency	70%	74.5%

Output Rate (kJ/h)	17,842	16,925	**(Btu/h)**
Burn Rate (kg/h)	1.49	3.28	**(lb/h)**
Input (kJ/h)	27,984	26,546	**(Btu/h)**

Test Load Weight (dry kg)	19.10	42.10	**dry lb**
MC wet (%)	18.77		
MC dry (%)	23.11		
Particulate (g)	19.145		
CO (g)	2,156		
Test Duration (h)	12.83		

Emissions	**Particulate**	**CO**
g/MJ Output	0.08	9.41
g/kg Dry Fuel	1.00	112.85
g/h	1.49	167.97
lb/MM Btu Output	0.19	21.88

Air/Fuel Ratio (A/F)	18.24

VERSION: **2.4** **2010-04-15**

VERSION: 2.4 2010-04-15

Manufacturer: SBI
Model: FP-15 Series
Date: 2016-06-10
Run: 3
Control #: QC20160608
Test Duration: 680
Output Category: 2

Appliance Type: Non-Cat (Cat, Non

Temp. Units F (F or C)
Weight Units lb (kg or lb)

Fuel Data

	Beech	
HHV	18,800	kJ/kg
%C	48.7	
%H	5.8	
%O	44.9	
%Ash	0.6	

Wood Moisture (% wet): 18.96
Load Weight (lb wet): 51.38
Burn Rate (dry kg/h): 1.67
Total Particulate Emissions: 12.265 g

	Averages	**0.38**	**5.05**	**15.43**	**347.26**	**75.42**
					Temp. (ºF)	
Elapsed Time (min)	**Fuel Weight Remaining (lb)**	**Flue Gas Composition (%) CO**	**CO_2**	**O_2**	**Flue Gas**	**Room Temp**
0	51.38	0.35	3.75	15.53	293.6	75.5
10	46.59	1.27	13.67	6.89	695.2	75.8
20	41.44	0.91	13.76	6.98	760.1	76.7
30	36.80	1.66	14.61	6.12	802.0	77.5
40	32.13	1.01	14.74	6.24	820.4	78.4
50	28.38	0.63	11.15	10.15	697.7	79.3
60	26.08	0.50	11.05	10.08	615.2	79.1
70	23.76	0.52	11.38	9.70	597.9	78.2
80	21.49	0.43	11.42	9.73	599.2	78.1
90	19.31	0.44	11.59	9.46	595.2	79.4
100	17.20	0.46	11.48	9.46	590.9	78.4
110	15.22	0.36	11.11	9.52	574.9	79.5
120	13.50	0.23	10.16	10.66	564.8	80.0
130	12.05	0.22	9.35	11.24	540.7	79.3
140	10.82	0.30	8.94	11.41	521.2	76.8
150	9.84	0.15	7.36	12.86	497.3	79.8
160	9.25	0.29	6.46	13.70	457.9	79.1
170	8.70	0.35	5.84	14.58	423.2	77.6
180	8.25	0.40	5.38	14.88	401.3	73.9
190	7.91	0.44	4.91	15.33	369.5	73.1
200	7.60	0.46	4.81	15.47	348.6	71.9
210	7.32	0.42	4.72	15.53	335.1	72.3
220	7.02	0.43	4.70	15.59	325.3	72.1
230	6.75	0.43	4.65	15.61	318.0	71.8
240	6.48	0.46	4.36	15.98	310.5	72.1
250	6.24	0.41	4.22	16.10	301.0	71.7
260	5.99	0.40	4.13	16.20	296.4	71.6
270	5.75	0.41	4.09	16.15	289.6	70.8
280	5.55	0.41	4.03	16.23	287.3	71.3
290	5.34	0.37	3.97	16.33	284.3	71.2
300	5.11	0.36	3.82	16.48	279.9	71.4
310	4.90	0.35	3.81	16.53	276.9	71.6
320	4.69	0.38	3.60	16.71	275.2	71.8
330	4.52	0.36	3.57	16.77	272.4	71.2
340	4.30	0.37	3.52	16.81	269.8	70.4
350	4.14	0.36	3.50	16.89	268.1	71.2
360	3.94	0.33	3.39	16.98	265.0	71.1
370	3.76	0.34	3.37	17.01	262.6	71.2
380	3.59	0.33	3.30	17.07	261.2	71.7
390	3.41	0.31	3.20	17.18	259.0	71.9
400	3.24	0.31	3.15	17.27	257.3	71.8
410	3.08	0.30	3.00	17.40	255.0	70.8
420	2.91	0.29	2.91	17.51	252.9	72.3
430	2.74	0.29	2.85	17.58	250.9	72.1
440	2.59	0.28	2.77	17.66	248.9	71.1
450	2.44	0.28	2.74	17.69	246.6	71.4
460	2.30	0.27	2.68	17.78	244.5	71.0
470	2.17	0.27	2.63	17.80	242.2	73.1
480	2.05	0.26	2.62	17.83	241.8	76.5
490	1.93	0.2606	2.61	17.83	240.875	77.9416
500	1.82	0.2651	2.62	17.91	240.219	78.3901
510	1.72	0.2526	2.49	18.07	238.888	78.6828
520	1.61	0.2516	2.47	18.09	238.607	78.7297
530	1.51	0.2388	2.4	18.17	236.629	78.6965
540	1.41	0.2326	2.37	18.22	234.638	78.8208
550	1.30	0.2269	2.34	18.25	232.651	78.8207
560	1.21	0.2179	2.26	18.33	230.375	78.8257
570	1.10	0.2134	2.28	18.33	227.776	78.4933
580	1.00	0.2146	2.29	18.29	226.074	78.8713
590	0.89	0.205	2.26	18.36	225.566	78.8922
600	0.78	0.1977	2.15	18.49	223.598	78.5712
610	0.70	0.21	2.08	18.51	221.652	78.054
620	0.60	0.1967	1.99	18.65	219.603	78.1491
630	0.51	0.185	1.88	18.79	216.383	78.1663
640	0.42	0.172	1.76	18.93	211.938	77.9522
650	0.34	0.1652	1.69	19	207.626	77.9082
660	0.25	0.3363	1.7	17.49	203.728	78.0526
670	0.06	0.3788	3.28	17	217.58	78.0353
680	0.00	0.3486	3.06	17.28	221.354	78.0432

Manufacturer: Stll

Model: FR15 Series

Date: 06-10-16

Run: 3

Control #: QC20160808

Test Duration: 680 min

	HHV	LHV
Eff	65.35%	70.01%
Comb Eff	94.86%	94.88%
HT Eff	68.88%	73.79%
Output	20,480	kJh
Burn Rate	1.67	kg/h
Grams CO	1,363	g
Input	31,339	kJh
MC wet	18.96	

Note: In the "Input data", "Calc. % O_2", "Fuel Properties" and "Mass Balance" columns, [e], [g], [j], [k], [l], [n], [t], [u], [w], [jj], and [kk] refer to their respective variables in Clauses 13.7.3 to 13.7.5.

Air Fuel Ratio (A/F)

Overall Heating Efficiency:	65.35%	Dry Molecular Weight (Md)	29.43
Combustion Efficiency:	94.88%	Dry Moles Exhaust Gas (Nd):	630.39 %HC
Heat Transfer Efficiency:	68.88%	Air Fuel Ratio (A/F)	18.04 1.32

Ultimate CO_2: $CO_{2,ult}$ 20.77, F_0 1.001

Heat Output: 19,428 Btu/h 20,480 kJ/h

Heat Input: 29,728 Btu/h 31,339 kJ/h

Burn Duration: 11.33 h

Burn Rate: 3.67 lb/h 1.667 kg/h

Stack Temp: 348.0 Deg. F 175.6 Deg. C

Combustion Efficiency: 94.88%

Total Input (kJ): 355,173 336,864 (Btu)

Total Output (kJ): 232,109 220,145 (Btu)

Efficiency: 65.35%

Total CO (g): 1362.88

Moisture Content M_{cwb}: 18.96

Moisture of Wood (w et basis): 18.96 Dry kg : 18.89

Initial Dry Weight W_{dw} (kg): 18.89 CA: 48.7

Moisture Content Dry 23.40 HY: 5.0

CIX: 44.0

Load Weight (kg): 23.31

Fuel Heating HHV 18,800 LHV 17,549 Btu/lb 8088.0 7549.9

Value in kJ/kg - CV -

			Oxygen Calculation		Input Data								Mass Balance					Fuel Properties							Heat Content Change - Ambient to Stack Temperature								Energy Losses (kJ/kg of Dry Fuel)							
																									Moles per kg of Dry Wood							Flue Gas Constituent							
Elapsed Time	Weight Remaining (kg)	% CO_2	% CO_2 (S)	Excess Air EA	Total U_1	Calc. % O_2 (S)	Flue Gas Temp (°C)	Room Temp (°C)	Combust Eff %	Heat Transfer Eff %	Net Eff %	Air Fuel Ratio	Wet Wt Now Consumed Wt	% Wet Dry Wt Now Consumed x	Dry Wt. % Dry Now Consumed WW_{cc} y	Total Input	Carbon [/12= [a]	Hydrogen [/1= [b]	Oxygen [/16= [c]	Calorific Value	Moisture Content Fuel Burnt	Moisture Present	Stack Temp K	CO_2	O_2	CO	N_2	CH_4	H_2O Combust	H_2O Fuel Mc	CO_2	O_2	CO	N_2	CH_4	H_2O Combust	H_2O Fuel Mc	Total Loss Rate
[h]													[u]	[w]	[jj]	[k]		Nk																					
0	23.31	0.35	3.75	406.3%	20.91	16.98	145.3	24.2	93.7%	68.5%	64.2%	28.5	23.31	0.00	18.89	0.00	0	0.00	4.50	2.81	18800.00	18.96	78.92	20.93	1.02	2.90	0.02	0.10	37.11	168.04	3.50	0.22	780.94	28.73	13.00	418.46	4835.04	3634.00	3532.64	3493.73	4664.80	4227.00	297.34	179.43	610.65	1001.90	2728.40	198.30	1384.76	626.44	6729.88
10	21.14	1.27	13.67	39.0%	20.82	6.51	368.4	24.4	92.7%	69.9%	64.8%	7.7	21.14	9.33	17.13	9.33	50906	4.06	5.80	2.81	18800.00	18.96	78.54	20.83	3.72	10.47	0.16	0.37	36.95	17.61	3.44	0.44	212.28	28.30	13.00	641.99	14849.29	10669.12	10250.56	10163.07	########	12226.92	297.51	548.62	187.83	1009.87	2157.38	397.02	1590.24	730.42	6621.39
20	18.80	0.91	13.76	41.6%	20.82	6.61	404.5	24.8	94.7%	67.9%	64.3%	7.9	18.80	19.34	15.24	19.34	33826	4.06	5.80	2.81	18800.00	18.96	78.72	20.88	3.64	10.34	0.11	0.36	38.01	18.25	2.51	0.31	217.44	28.55	13.00	677.68	16587.14	11835.55	11350.08	11257.70	########	13531.63	298.00	630.41	216.05	739.01	2447.83	282.76	1641.75	747.38	6705.19
30	16.70	1.66	14.61	27.7%	20.81	5.37	427.8	25.3	91.3%	67.4%	61.6%	7.1	16.70	28.38	13.53	28.38	32184	4.06	5.80	2.81	18800.00	18.96	78.36	20.79	4.06	11.35	0.22	0.40	36.18	13.30	4.11	0.53	194.06	28.11	13.00	700.95	17722.28	12589.70	12058.82	11963.76	########	14371.93	298.45	641.24	167.45	1212.85	2321.73	486.06	1639.70	758.30	7227.34
40	14.58	1.01	14.74	31.9%	20.81	5.57	438.0	25.8	94.0%	67.2%	63.5%	7.4	14.58	37.46	11.81	37.46	29119	4.06	5.80	2.81	18800.00	18.96	78.68	20.87	3.91	11.09	0.13	0.39	37.90	14.32	2.60	0.33	202.28	28.52	13.00	711.17	18214.82	12913.97	12362.74	12266.71	########	14732.01	298.94	690.25	184.87	768.90	2481.26	300.04	1673.87	762.98	6862.18
50	12.87	0.63	11.15	76.4%	20.85	9.38	369.8	26.3	95.6%	66.4%	63.5%	9.9	12.87	44.77	10.43	44.77	20931	4.06	5.80	2.81	18800.00	18.96	78.84	20.91	2.92	8.33	0.07	0.29	38.42	32.32	2.17	0.24	271.63	28.69	13.00	642.99	14843.58	10658.24	10238.37	10151.35	########	12211.82	299.43	570.23	344.51	635.77	2757.40	221.32	1611.62	730.23	6871.07
60	11.83	0.50	11.05	79.9%	20.85	9.55	324.5	26.1	96.5%	69.9%	67.1%	10.1	11.83	49.25	9.59	49.25	15971	4.06	5.80	2.81	18800.00	18.96	78.90	20.93	2.86	8.16	0.05	0.28	38.90	33.62	1.75	0.19	277.74	28.80	13.00	597.14	12999.66	9179.26	8837.55	8758.00	########	10547.70	299.30	492.80	308.54	509.72	2432.46	167.62	1570.29	708.60	6190.03
70	10.78	0.52	11.38	74.6%	20.85	9.21	314.4	25.7	96.4%	70.6%	68.1%	9.8	10.78	53.77	8.73	53.77	15863	4.06	5.80	2.81	18800.00	18.96	78.90	20.93	2.94	8.43	0.06	0.29	38.88	31.45	1.76	0.19	269.52	28.79	13.00	587.55	12240.32	8884.70	8559.34	8481.36	########	10217.09	298.81	475.85	279.46	513.63	2285.92	172.27	1560.20	704.30	5991.63
80	9.75	0.43	11.42	75.4%	20.85	9.21	315.1	25.6	97.1%	70.7%	68.6%	9.9	9.75	58.18	7.90	58.18	15350	4.06	5.80	2.81	18800.00	18.96	78.94	20.94	2.93	8.41	0.04	0.29	39.22	31.64	1.46	0.15	271.09	28.88	13.00	588.29	12276.31	8909.61	8583.03	8504.90	########	10245.27	298.77	481.45	281.89	425.95	2305.62	135.39	1565.44	704.67	5900.41
90	8.76	0.44	11.59	72.7%	20.84	9.04	312.9	26.3	97.0%	71.1%	69.0%	9.7	8.76	62.41	7.10	62.41	14820	4.06	5.80	2.81	18800.00	18.96	78.94	20.94	2.97	8.54	0.05	0.30	39.20	30.56	1.48	0.15	266.96	28.87	13.00	566.04	12144.99	8816.98	8494.48	8417.00	########	10139.78	299.47	476.03	269.42	431.07	2246.93	139.02	1561.96	703.30	5827.72
100	7.80	0.46	11.48	73.9%	20.84	9.13	310.5	25.8	96.8%	71.1%	68.8%	9.8	7.80	66.52	6.32	66.52	14155	4.06	5.80	2.81	18800.00	18.96	78.92	20.93	2.96	8.47	0.05	0.29	39.08	31.09	1.58	0.17	268.69	28.84	13.00	583.63	12053.56	8755.67	8436.70	8359.48	########	10071.23	298.93	471.09	272.24	460.06	2246.10	150.43	1558.61	702.40	5860.94
110	6.91	0.36	11.11	81.1%	20.85	9.56	301.6	26.4	97.5%	71.2%	69.4%	10.2	6.91	70.38	5.60	70.38	12775	4.06	5.80	2.81	18800.00	18.96	78.97	20.95	2.84	8.15	0.03	0.28	39.41	33.90	1.29	0.12	280.14	28.93	13.00	574.76	11618.08	8453.00	8148.54	8073.21	########	9728.35	299.57	457.90	286.58	376.05	2261.67	111.65	1553.33	697.95	5745.12
120	6.13	0.23	10.16	99.9%	20.90	10.58	296.0	26.7	98.3%	70.2%	69.1%	11.3	6.13	73.72	4.97	73.72	10961	4.06	5.80	2.81	18800.00	18.96	79.03	20.96	2.36	6.82	0.01	0.23	39.86	41.51	0.91	0.08	295.05	29.00	13.00	569.16	11349.90	8266.58	7971.04	7896.89	########	9517.15	299.83	452.36	343.12	265.26	2448.07	55.17	1553.92	695.20	5813.10
130	5.47	0.22	9.35	117.2%	20.86	11.41	282.6	26.3	98.4%	69.8%	68.7%	12.3	5.47	76.55	4.43	76.55	9290	4.06	5.80	2.81	18800.00	18.96	79.03	20.96	2.36	6.82	0.01	0.23	39.86	48.62	0.92	0.05	336.89	29.07	13.00	555.77	10751.16	7851.91	7576.63	7505.00	########	9047.98	299.43	428.53	381.79	266.81	2528.39	46.39	1541.31	689.10	5882.33
140	4.91	0.30	8.94	124.7%	20.87	11.77	271.8	24.9	97.5%	69.8%	68.1%	12.7	4.91	78.95	3.98	78.95	7627	4.06	5.80	2.81	18800.00	18.96	79.08	20.95	2.28	6.58	0.02	0.23	39.39	51.88	1.34	0.10	347.97	29.07	13.00	544.94	10310.96	7548.76	7288.76	7218.87	########	8705.70	298.05	406.12	391.60	388.40	2511.95	83.00	1525.91	684.86	6001.63
150	4.46	0.15	7.36	176.7%	20.88	13.45	258.5	26.5	98.8%	67.6%	66.8%	15.7	4.46	80.85	3.62	80.85	5424	4.06	5.80	2.81	18800.00	18.96	79.05	20.97	1.85	5.36	0.00	0.18	40.03	73.13	0.80	0.00	429.92	29.18	13.00	531.67	9649.48	7081.01	6841.30	6774.81	9685.27	8172.58	299.68	386.27	517.87	231.73	2912.62	-0.93	1521.34	677.73	6246.62
160	4.20	0.29	6.46	207.9%	20.89	14.28	236.6	26.2	96.9%	67.2%	65.1%	17.4	4.20	82.00	3.40	82.00	3935	4.06	5.80	2.81	18800.00	18.96	79.07	20.95	1.67	4.80	0.02	0.17	38.99	86.22	1.73	0.10	476.68	28.97	13.00	509.79	8687.05	6403.53	6194.00	6132.27	8656.27	7401.64	299.30	338.74	552.09	500.11	2923.15	84.32	1487.96	667.71	6564.08
170	3.95	0.39	5.84	235.7%	20.89	14.88	217.3	25.4	95.8%	67.2%	64.4%	18.9	3.95	83.06	3.20	83.06	3428	4.06	5.80	2.81	18800.00	18.96	78.94	20.94	1.53	4.39	0.02	0.15	38.38	97.76	2.29	0.16	518.70	28.85	13.00	490.49	7887.74	5823.47	5638.92	5581.46	7787.56	6740.25	298.50	301.93	569.28	660.79	2855.07	146.65	1462.88	659.11	6695.71
180	3.75	0.40	5.38	259.1%	20.89	15.31	205.2	23.3	94.7%	66.8%	63.2%	20.2	3.75	83.93	3.04	83.93	2726	4.06	5.80	2.81	18800.00	18.96	78.90	20.93	1.43	4.09	0.03	0.14	37.77	107.48	2.84	0.22	553.88	28.73	13.00	478.33	7416.38	5505.51	5335.07	5279.85	7305.48	6378.34	296.44	280.09	591.75	818.69	2924.39	200.17	1446.43	654.40	6915.93
190	3.59	0.44	4.91	288.3%	20.90	15.77	187.5	22.8	93.7%	67.2%	62.9%	21.8	3.59	84.60	2.91	84.60	2277	4.06	5.80	2.81	18800.00	18.96	78.88	20.92	1.33	3.78	0.04	0.13	37.22	119.53	3.33	0.27	598.00	28.63	13.00	460.63	6669.90	4970.08	4820.87	4769.99	6529.20	5765.07	295.99	248.27	594.09	959.60	2852.47	243.75	1423.95	646.43	6968.57
200	3.45	0.46	4.81	294.3%	20.90	15.86	175.9	22.2	93.3%	68.3%	63.7%	22.1	3.45	85.22	2.79	85.22	2046	4.06	5.80	2.81	18800.00	18.96	78.87	20.92	1.31	3.72	0.04	0.13	37.00	122.01	3.53	0.29	606.79	28.59	13.00	449.05	6200.26	4632.00	4495.89	4447.82	6043.46	5377.38	295.32	229.44	565.13	1014.53	2698.90	263.88	1410.62	641.39	6829.90
210	3.32	0.42	4.72	304.3%	20.90	15.97	168.4	22.4	93.8%	69.0%	64.8%	22.7	3.32	85.75	2.69	85.75	1998	4.06	5.80	2.81	18800.00	18.96	78.89	20.93	1.27	3.63	0.03	0.13	37.27	126.08	3.30	0.26	622.86	28.66	13.00	441.56	5873.12	4394.30	4266.83	4220.86	5709.93	5103.94	295.57	218.86	554.05	949.37	2629.02	231.26	1406.37	637.84	6826.78
220	3.18	0.43	4.70	305.1%	20.90	15.99	162.9	22.3	93.6%	69.7%	65.3%	22.8	3.18	86.34	2.58	86.34	1972	4.06	5.80	2.81	18800.00	18.96	78.89	20.92	1.27	3.62	0.03	0.13	37.17	126.43	3.39	0.27	623.94	28.64	13.00	436.07	5646.71	4229.93	4103.47	4063.95	5478.79	4914.91	295.42	209.91	534.80	972.12	2535.68	240.53	1399.93	635.36	6828.34
230	3.06	0.43	4.65	308.9%	20.90	16.03	158.9	22.1	93.5%	70.1%	65.5%	23.0	3.06	86.86	2.48	86.86	1870	4.06	5.80	2.81	18800.00	18.96	78.89	20.92	1.26	3.59	0.03	0.13	37.12	128.00	3.44	0.27	629.72	28.63	13.00	432.02	5482.78	4110.81	3993.69	3950.21	5311.67	4777.88	295.24	203.52	526.18	986.02	2487.52	244.42	1395.58	633.60	6876.83
240	2.94	0.46	4.36	331.3%	20.90	16.31	154.7	22.3	92.7%	69.5%	64.5%	24.2	2.94	87.39	2.38	87.39	1764	4.06	5.80	2.81	18800.00	18.96	78.87	20.92	1.20	3.39	0.04	0.12	36.67	137.20	3.84	0.31	663.33	28.55	13.00	427.86	5301.32	3978.13	3865.61	3823.36	5128.50	4624.93	295.41	194.40	545.80	1102.80	2536.15	281.46	1387.18	631.61	6879.40
250	2.83	0.41	4.22	348.3%	20.90	16.48	149.5	22.0	93.2%	69.7%	65.0%	25.2	2.83	87.85	2.29	87.85	1673	4.06	5.80	2.81	18800.00	18.96	78.90	20.93	1.15	3.27	0.03	0.11	36.83	144.17	3.63	0.27	690.80	28.43	13.00	422.62	5060.80	3824.60	3717.53	3676.66	4919.13	4448.03	295.18	187.98	551.36	1040.13	2586.97	245.95	1385.96	629.32	6878.71
260	2.72	0.40	4.13	358.8%	20.90	16.58	146.9	22.0	93.4%	69.7%	65.1%	25.8	2.72	88.34	2.20	88.34	1712	4.06	5.80	2.81	18800.00	18.96	78.90	20.93	1.12	3.20	0.03	0.11	37.01	148.51	3.56	0.26	706.93	28.66	13.00	420.02	4984.04	3746.51	3642.13	3601.99	4807.40	4358.05	295.14	184.44	556.41	1021.41	2546.34	232.35	1384.85	628.15	6553.94
270	2.61	0.41	4.09	361.3%	20.90	16.61	143.1	21.5	93.1%	70.1%	65.2%	25.9	2.61	88.82	2.11	88.82	1542	4.06	5.80	2.81	18800.00	18.96	78.89	20.93	1.12	3.18	0.03	0.11	36.82	149.53	3.72	0.28	710.28	28.62	13.00	416.25	4843.90	3644.45	3543.72	3504.49	4665.06	4240.56	294.69	178.38	544.94	1067.03	2489.19	250.34	1379.54	626.62	6536.03
280	2.52	0.41	4.03	368.2%	20.90	16.67	141.8	21.9	93.1%	70.1%	65.3%	26.2	2.52	89.20	2.04	89.20	1486	4.06	5.80	2.81	18800.00	18.96	78.90	20.93	1.10	3.13	0.03	0.11	36.84	152.38	3.72	0.27	717.11	28.63	13.00	414.96	4778.53	3596.07	3496.61	3457.96	4603.45	4184.47	295.01	176.02	547.98	1065.01	2493.65	245.73	1378.43	625.89	6532.71
290	2.42	0.37	3.97	378.5%	20.91	16.75	140.2	21.8	93.7%	70.1%	65.6%	26.9	2.42	89.61	1.96	89.61	1521	4.06	5.80	2.81	18800.00	18.96	78.91	20.93	1.08	3.07	0.03	0.11	37.12	156.60	3.48	0.24	737.76	28.70	13.00	413.34	4714.52	3549.14	3451.55	3413.23	4536.00	4130.42	294.92	174.99	555.80	995.45	2518.13	210.86	1380.63	625.19	6461.05
300	2.32	0.36	3.82	397.3%	20.91	16.91	137.7	21.9	93.7%	69.8%	65.4%	28.0	2.32	90.06	1.88	90.06	1511	4.06	5.80	2.81	18800.00	18.96	78.91	20.93	1.03	2.96	0.02	0.10	37.13	164.36	3.47	0.22	767.09	28.73	13.00	410.88	4606.92	3469.86	3374.88	3337.32	4428.69	4038.80	295.06	171.07	570.29	994.32	2560.03	200.13	1379.15	624.20	6498.99
310	2.22	0.35	3.71	399.6%	20.91	16.92	136.1	22.0	93.9%	70.1%	65.8%	28.1	2.22	90.46	1.80	90.46	1445	4.06	5.80	2.81	18800.00	18.96	78.92	20.93	1.03	2.94	0.02	0.10	37.21	165.28	3.20	0.21	770.78	28.75	13.00	409.22	4534.91	3416.78	3324.33	3286.49	4356.94	3977.44	295.14	168.75	564.73	974.34	2563.17	190.63	1378.40	623.20	6433.42
320	2.13	0.38	3.60	422.3%	20.91	17.12	135.1	22.1	93.0%	69.2%	64.3%	29.4	2.13	90.87	1.72	90.87	1322	4.06	5.80	2.81	18800.00	18.96	78.90	20.93	0.99	2.81	0.03	0.10	36.72	174.60	3.85	0.26	804.73	28.66	13.00	408.28	4492.33	3385.30	3293.06	3256.33	4314.69	3941.03	295.24	164.94	591.08	1102.82	2620.47	232.32	1372.89	622.72	6707.24
330	2.06	0.36	3.57	428.7%	20.91	17.16	133.6	21.8	93.3%	69.3%	64.6%	29.7	2.06	91.20	1.66	91.20	1347	4.06	5.80	2.81	18800.00	18.96	78.91	20.93	0.97	2.78	0.02	0.10	36.88	177.24	3.71	0.24	815.12	28.70	13.00	406.73	4440.77	3347.80	3256.92	3220.52	4262.21	3897.88	294.91	163.76	593.38	1063.28	2625.12	212.18	1373.81	622.16	6653.68
340	1.95	0.37	3.52	434.6%	20.91	17.21	132.1	21.3	93.1%	69.2%	64.4%	30.1	1.95	91.63	1.58	91.63	1323	4.06	5.80	2.81	18800.00	18.96	78.91	20.93	0.96	2.75	0.02	0.10	36.76	179.67	3.82	0.25	823.98	28.68	13.00	405.27	4396.14	3315.49	3225.81	3189.69	4216.46	3860.75	294.50	161.59	595.70	1094.20	2628.26	222.02	1371.69	621.68	6695.14
350	1.88	0.36	3.50	438.5%	20.91	17.23	131.2	21.8	93.2%	69.3%	64.6%	30.3	1.88	91.95	1.52	91.95	1239	4.06	5.80	2.81	18800.00	18.96	78.91	20.93	0.96	2.73	0.02	0.10	36.83	181.30	3.76	0.24	830.33	28.70	13.00	404.31	4340.22	3273.69	3185.23	3149.55	4162.01	3812.21	294.93	159.84	593.53	1076.82	2615.16	212.57	1371.31	621.05	6650.28
360	1.79	0.33	3.39	457.9%	20.91	17.35	129.4	21.7	93.5%	69.1%	64.6%	31.4	1.79	92.33	1.45	92.33	1291	4.06	5.80	2.81	18800.00	18.96	78.92	20.93	0.92	2.64	0.02	0.09	36.98	189.28	3.64	0.21	849.83	28.76	13.00	402.57	4269.83	3221.84	3135.08	3099.90	4091.80	3752.29	294.89	157.88	609.82	1042.37	2668.48	187.49	1372.26	620.27	6658.58
370	1.71	0.34	3.37	459.8%	20.91	17.37	128.1	21.8	93.3%	69.2%	64.6%	31.5	1.71	92.68	1.38	92.68	1226	4.06	5.80	2.81	18800.00	18.96	78.92	20.93	0.92	2.63	0.02	0.09	36.87	190.05	3.74	0.22	863.47	28.73	13.00	401.28	4215.53	3181.72	3096.26	3061.47	4037.86	3705.89	294.92	155.43	604.68	1068.64	2643.49	197.59	1369.85	619.67	6659.34
380	1.63	0.33	3.30	472.4%	20.91	17.45	127.4	22.1	93.5%	69.0%	64.5%	32.2	1.63	93.02	1.32	93.02	1216	4.06	5.80	2.81	18800.00	18.96	78.92	20.93	0.90	2.57	0.02	0.09	36.94	195.29	3.68	0.21	883.43	28.76	13.00	400.51	4173.02	3149.97	3066.44	3030.98	3996.44	3669.03	295.20	154.14	615.15	1053.77	2677.67	184.38	1370.20	619.19	6674.50
390	1.55	0.31	3.20	491.5%	20.91	17.56	126.1	22.2	93.7%	68.7%	64.3%	33.3	1.55	93.36	1.25	93.36	1206	4.06	5.80	2.81	18800.00	18.96	78.93	20.94	0.87	2.49	0.02	0.09	37.03	203.17	3.61	0.18	913.46	28.81	13.00	399.28	4118.25	3109.37	3026.11	2992.05	3942.34	3622.02	295.31	152.51	631.74	1032.73	2733.13	165.06	1370.90	618.58	6704.65
400	1.47	0.31	3.15	500.5%	20.91	17.61	125.2	22.1	93.7%	68.6%	64.2%	33.8	1.47	93.70	1.19	93.70	1153	4.06	5.80	2.81	18800.00	18.96	78.93	20.94	0.86	2.45	0.02	0.09	37.01	206.87	3.64	0.18	927.38	28.81	13.00	398.31	4079.74	3080.96	2998.63	2964.84	3904.02	3589.17	295.28	150.99	637.37	1039.96	2749.54	163.21	1370.15	618.15	6729.37
410	1.40	0.30	3.00	530.3%	20.91	17.77	123.9	21.6	93.7%	67.7%	63.5%	35.5	1.40	94.01	1.13	94.01	1147	4.06	5.80	2.81	18800.00	18.96	78.94	20.94	0.82	2.34	0.01	0.08	37.01	219.17	3.65	0.17	973.84	28.84	13.00	397.04	4049.09	3059.03	2977.59	2943.97	3872.02	3564.08	294.71	149.86	670.46	1044.27	2766.97	148.69	1370.97	617.83	6869.04
420	1.32	0.29	2.91	548.3%	20.91	17.86	122.7	22.4	93.6%	67.5%	63.2%	36.5	1.32	94.35	1.07	94.35	1154	4.06	5.80	2.81	18800.00	18.96	78.94	20.94	0.79	2.27	0.01	0.08	36.92	226.59	3.74	0.17	1001.64	28.84	13.00	395.90	3971.72	3000.79	2920.95	2887.96	3797.56	3496.30	295.52	146.65	679.95	1068.43	2892.70	149.08	1368.97	616.94	6922.71
430	1.24	0.29	2.85	562.6%	20.92	17.92	121.6	22.3	93.7%	67.3%	63.1%	37.4	1.24	94.66	1.01	94.66	-405	4.06	5.80	2.81	18800.00	18.96	78.94	20.94	0.78	2.23	0.01	0.08	36.97	232.49	3.70	0.15	1024.07	28.87	13.00	394.75	3927.58	2968.24	2889.45	2856.78	3753.62	3458.66	295.43	145.21	690.10	1058.80	2925.54	137.19	1369.15	616.46	6942.44
440	1.18	0.28	2.77	581.7%	20.92	18.01	120.5	21.7	93.8%	66.8%	62.7%	38.5	1.18	94.95	1.11	94.95	1142	4.06	5.80	2.81

Intertek Testing Services NA, Inc.

Manufacturer: SBI
Model: FP-15 Series
Date: 06-10-16
Run: 3
Control #: QC20160608
Test Duration: 680
Output Category: 2

Technicians: Claude Pelland

Test Results in Accordance with CSA B415.1-10

	HHV Basis	LHV Basis
Overall Efficiency	65.4%	70.0%
Combustion Efficiency	94.9%	94.9%
Heat Transfer Efficiency	69%	73.8%

Output Rate (kJ/h)	20,480	19,428	**(Btu/h)**
Burn Rate (kg/h)	1.67	3.67	**(lb/h)**
Input (kJ/h)	31,339	29,728	**(Btu/h)**

Test Load Weight (dry kg)	18.89	41.64	**dry lb**
MC wet (%)	18.96		
MC dry (%)	23.40		
Particulate (g)	12.265		
CO (g)	1,363		
Test Duration (h)	11.33		

Emissions	Particulate	CO
g/MJ Output	0.05	5.87
g/kg Dry Fuel	0.65	72.14
g/h	1.08	120.25
lb/MM Btu Output	0.12	13.65

Air/Fuel Ratio (A/F)	18.04

VERSION: **2.4** **2010-04-15**

Total Quality. Assured.

1. Tunnel cleaning pictures

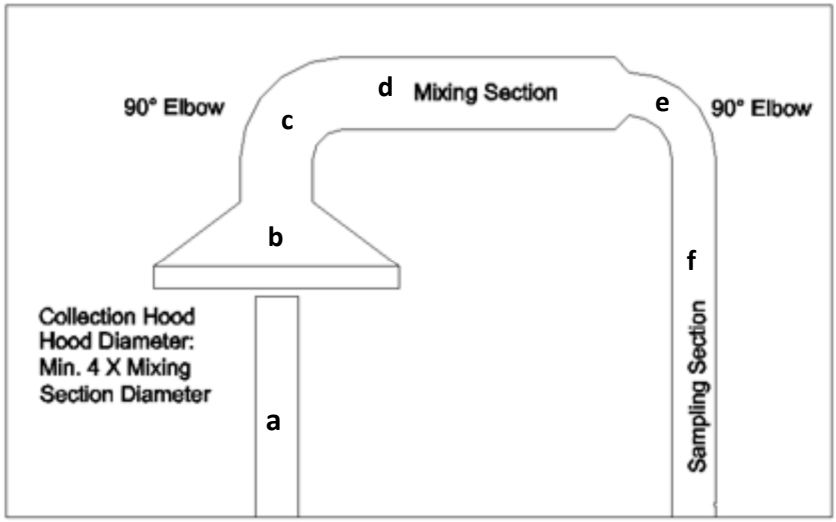

a. Picture of the chimney

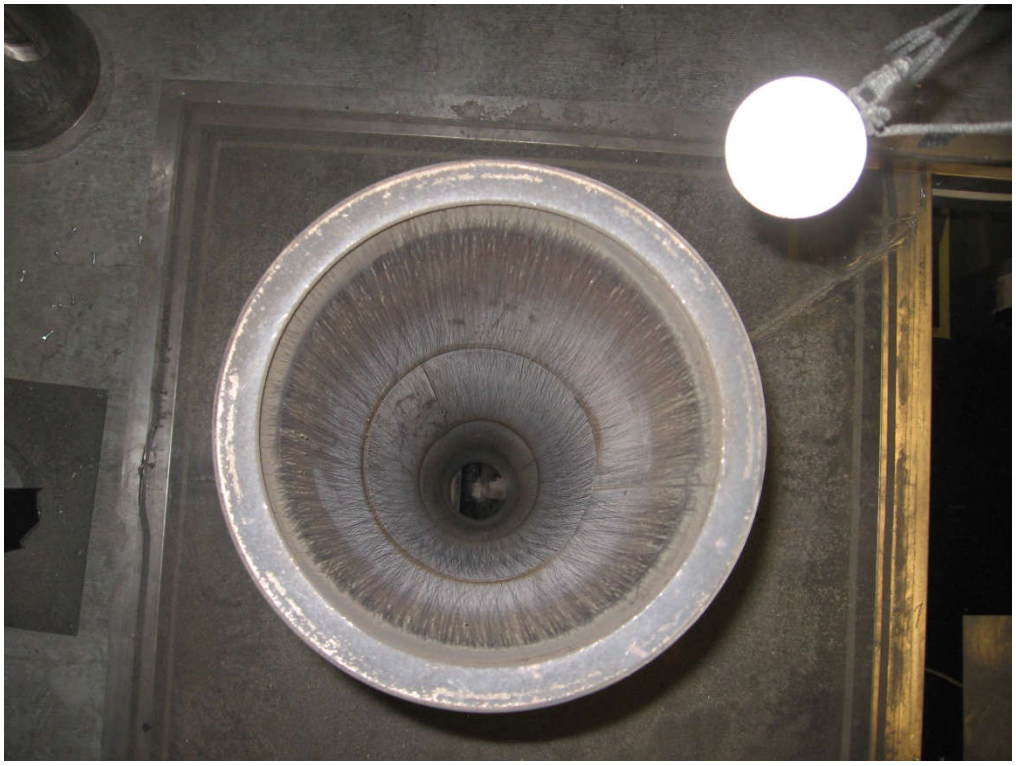

b. Picture of the collecting hood



c. Picture of the first elbow



d. Picture of the mixing section

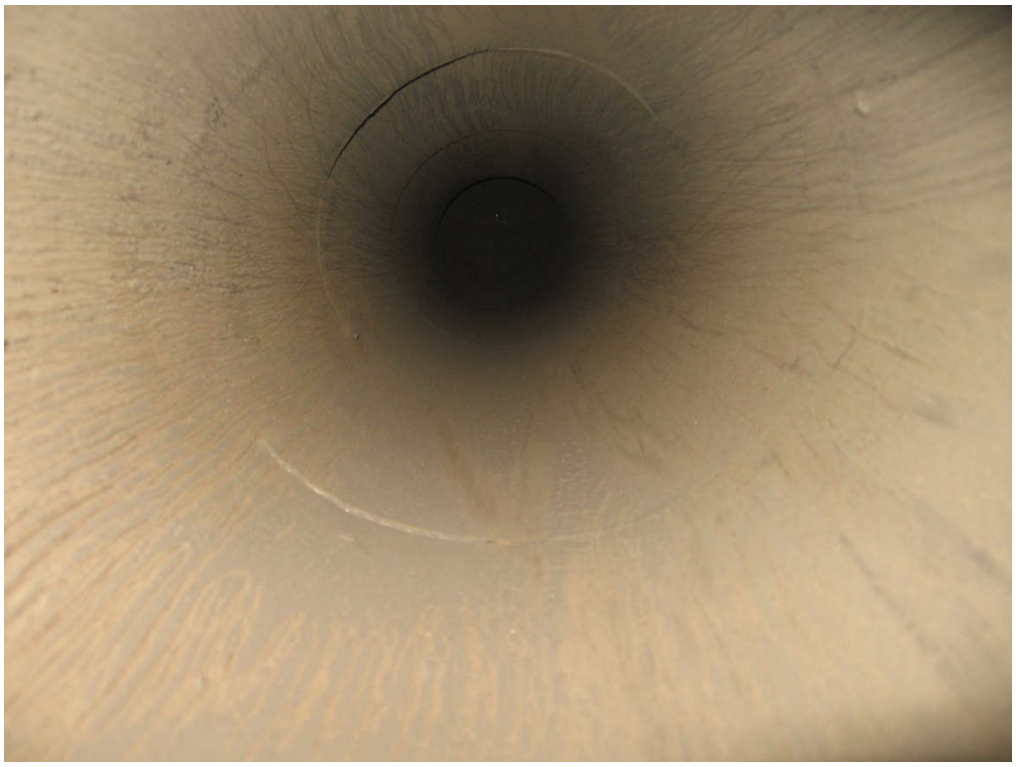

e. Picture of the second elbow



f. Picture of the sampling section

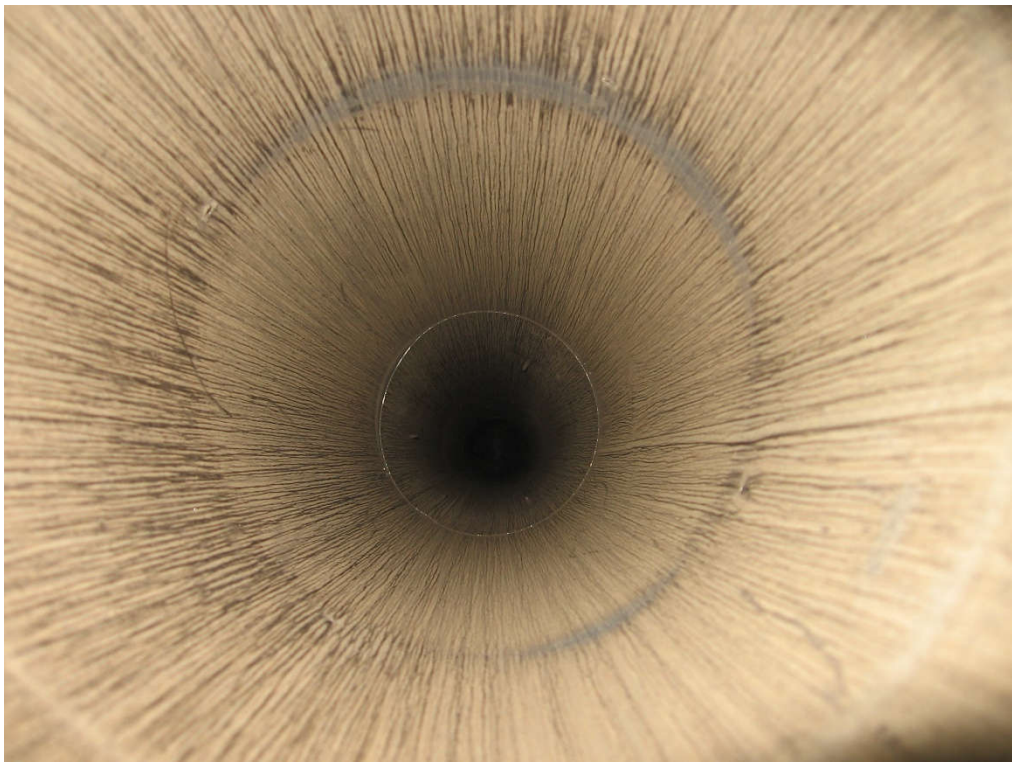

2. Test run pictures

a. Run #1

i. Picture of kindling before loading

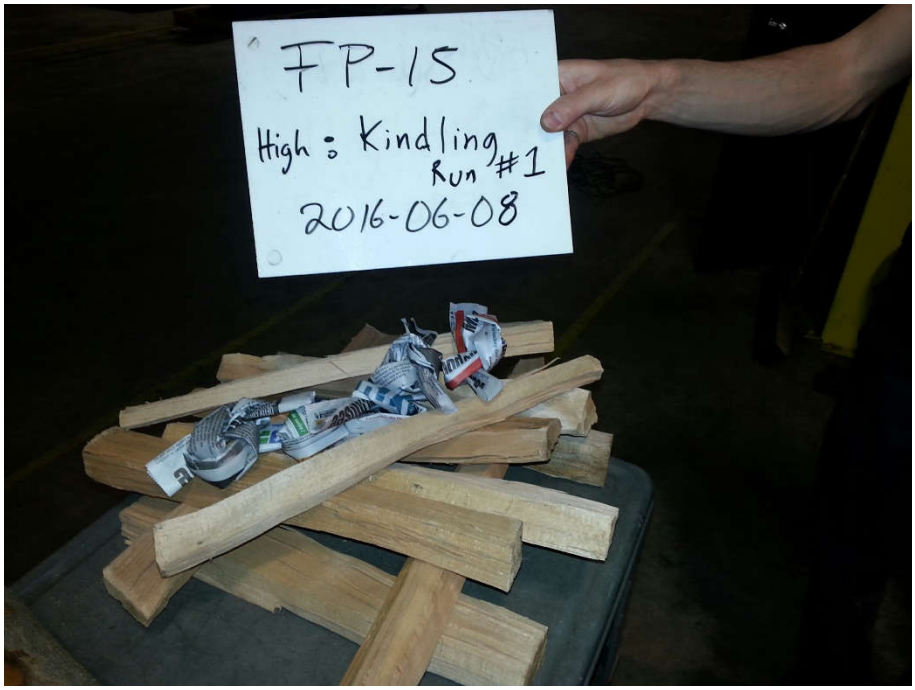

ii. Picture of kindling after loading

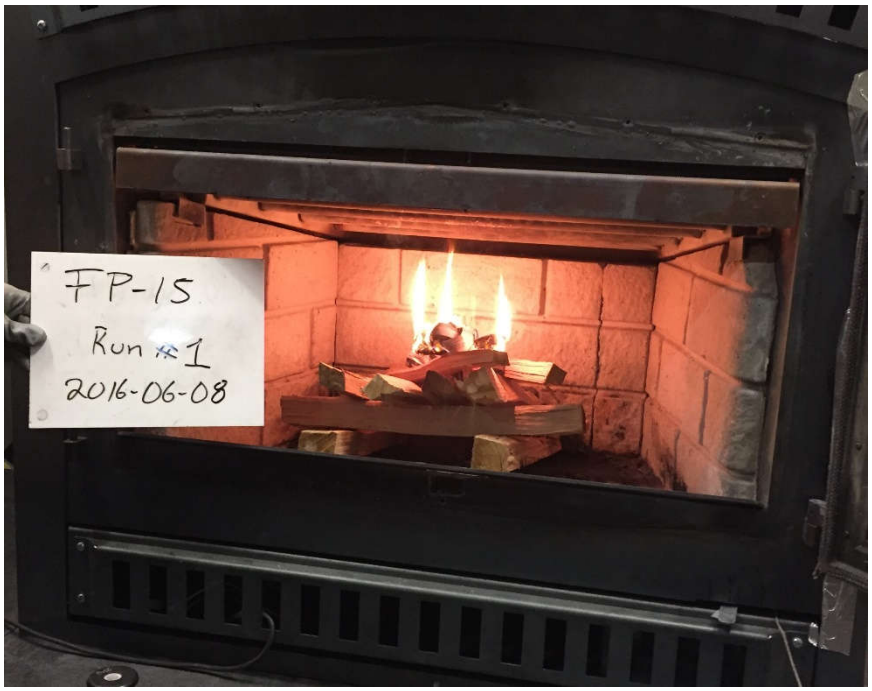

iii. Picture of start-up fuel before loading



iv. Picture of start-up fuel after loading



v. Picture of the load with all dimensions



vi. Picture after loading

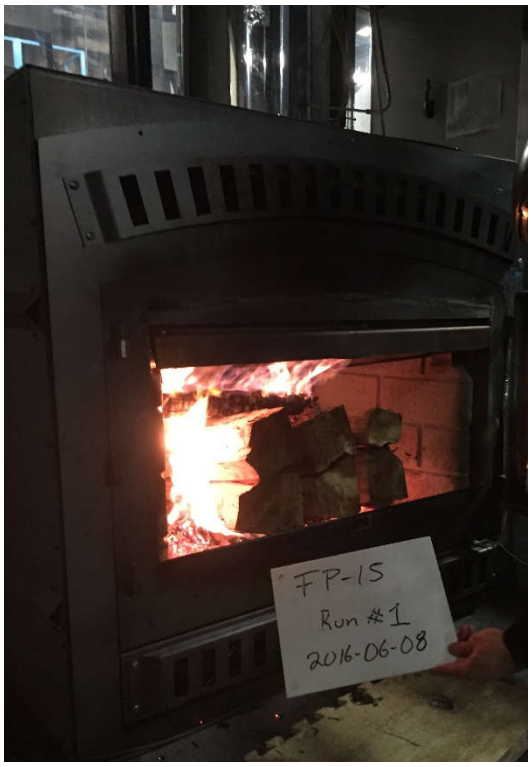

b. Run #2

i. Picture of the load with all dimensions



ii. Picture after loading

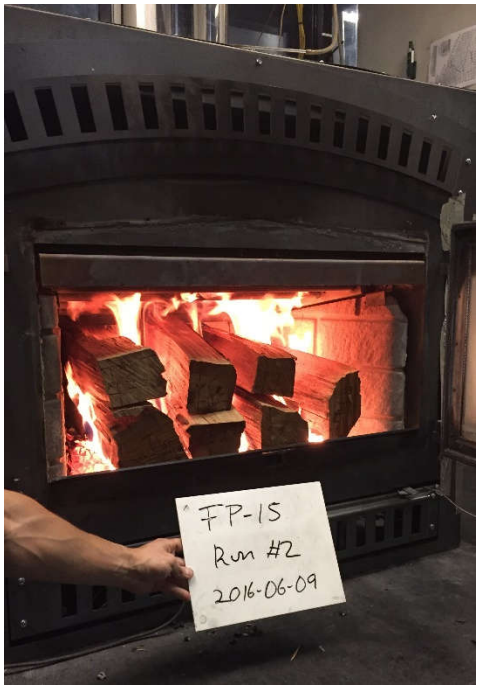

c. Run #3

i. Picture of the load with all dimensions



ii. Picture after loading

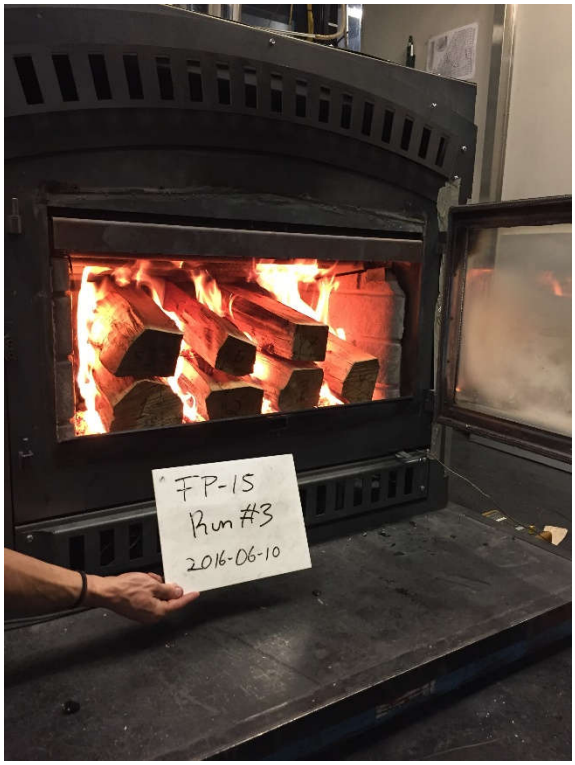

iii. Picture before raking at 11h03 run time



iv. Picture after 30s raking



3. Picture of the sealed unit

a. Front view



b. Side View



Appendix I

EPA Correspondence

UNITED STATES ENVIRONMENTAL PROTECTION AGENCY
RESEARCH TRIANGLE PARK, NC 27711

JAN 21 2016

OFFICE OF
AIR QUALITY PLANNING
AND STANDARDS

Mr. Vincent Pelletier, Jr. Eng.
Stove Builder International
Chemical Engineer
250 rue de Copenhague
Saint-Augustin-de-Desmaures
Quebec Canada, G3A 2H3

Dear Mr. Pelletier,

I am writing in response to your January 20, 2016 letter regarding the HE 350 wood stove and equivalent model FP-15 and Horizon. You are requesting an alternative test method using cordwood as referenced in Section 60.534 (a) (ii) of 40 CFR Part 60 Subpart AAA, Standards of Performance for New Residential Wood Heaters. You request to use the procedures and specifications found in the ASTM draft cordwood test method, ASTM work Item WK47329, titled "Standard Method for Determining Particulate Matter Emissions from Wood Heaters using Cordwood Test Fuel."

With the caveats listed below, we approve your alternative method request for testing the HE 350 wood stove and equivalent model FP-15 and Horizon wood stoves. As required in Subpart AAA Standards of Performance for New Residential Wood Heaters Section 60.534 (d), the manufacturer or approved test lab must also measure the first hour of particulate matter emissions for each test run using a separate filter in one of the two parallel sampling trains. These results must be reported separately and also included in the total particulate matter emissions per run and Section 60.534 (e) the manufacturer must have the approved test laboratory measure the efficiency, heat output and carbon monoxide emissions of the tested wood heater using Canadian Standards Administration (CSA) Method B415.1-10. For particulate matter emission concentrations ASTM 2515-11 should be used, four inch filters are also acceptable to use.

The following changes to ASTM work Item WK47329, titled "Standard Method for Determining Particulate Matter Emissions from Wood Heaters using Cordwood Test Fuel" must be followed:

1. The wood heater must be aged for 50 hours as stated in Appendix A-8 to Part 60 Test Methods 26 through 30B, procedures section 2.1.4 and not the 48 hours a stated in WK47329 section 9.1.4.

2. The end of test criteria is defined when the weight scale indicates the remaining weight of the test fuel as 0.0 lbs (0.00 kg) or less for 30 seconds. This criteria should be used for the high fire, low and medium burn rates.

3. Section 9.5.1 Start-up Condition. The average heater surface temperature per 9.2.2 and flue-gas temperature per 9.2.4 at the start of the test run must be less than a 10°F above ambient for the high fire test category.

4. Section 9.6.14 Invalid Test Run. The test run shall be considered invalid if less than the full test fuel weight has been consumed and there is no measurable weight loss (<0.1 lb (0.05 kg) or 1.0% of the test fuel weight, whichever is greater) for at least 30 minutes.

5. Coal bed conditions prior to loading test fuel. The coal bed should a level plane without valleys or ridges for all test runs in the high fire, low and medium burn rate categories.

6. The pre burn cycle burn rate category, leading into a test run, should be the same as the attempted burn rate category of the actual test. Example: If a low burn category is the desired test, the preburn should be at a low burn setting and likewise for the medium low, medium high and high burn rate categories.

The following changes to ASTM E2515-11 "Standard Test Method for Determination of Particulate Matter Emissions Collected by a Dilution Tunnel" must be followed:

1. The filter temperature must be maintained between 80 and 90 degree F during testing.

2. A glass cyclone must be used between the sampling probe and filter holders when the total particulate catch is expected to exceed 100 mg or when water droplets are present in the stack gas. This cyclone and its contents must be included in the pre-test weighing and post-test desiccation and weighing.

3. Filters must be weighed in pairs to reduce weighing error propagation. See ASTM E2515-11 Section 10.2.1 Analytical Procedure.

4. Sample filters must be Pall TX-40 or equivalent Teflon coated glass fiber, and of 47 mm, 90 mm, 100 mm or 110 mm.

5. Only one point is allowed outside the +/- 10% proportionality range per test run.

Please include this approval in your certification test report. If you have additional questions regarding these decisions, please contact Michael Toney of my staff at (919) 541-5247.

Sincerely,

Steffan Johnson, Group Leader
Measurement Technology Group

cc: Michael Toney, EPA/AQAD (143-02)
Rafael Sanchez, EPA/OECA (2227A)
Adam Baumgart-Getz, EPA/OID (C311M)
David Cole, EPA/OID (C311M)
Amanda Aldridge, EPA/OID (C311M)

SBI
Notre passion devient source d'énergie
We Turn passion Into Energy
Fabricant de poêles international inc.
Stove Builder International Inc.

April 21st, 2016

Air Branch/Wood Heater Program Lead
Monitoring, Assistance, and Media Programs Division
Office of Compliance
U.S. EPA
1200 Pennsylvania Ave., NW
MS:2227A
Washington, DC 20004
Attn: Rafael Sanchez

Subject: 30 days notice for certification of model line name **HE350**

Dear Mr. Sanchez

The model line **HE350** and equivalent model FP-15 and Horizon are affected wood heaters under the amended U.S. Environmental Protection Agency 40 CFR Part 60 Standards of Performance for New Residential Wood Heaters, New Residential Hydronic Heaters and Forced-Air Furnaces; Final Rule, Subpart AAA §60.530.

Under section §60.534 (g), Stove Builder International Inc. ("SBI") is required to provide a 30 days' notice before the date of certification testing to begin. We would therefore like to notify you that we intend to start a certification program on the model line stated above on May 30th, 2016. This certification program is planned to end on June 3rd, 2016.

On January 20th, 2016 SBI requested to use an alternative test method using cordwood as referenced in Section 60.534 (a) (ii) of 40 CFR Part 60 Subpart AAA, Standards of Performance for New Residential Wood Heaters for certification of this model line. In a letter dated January 21st, 2016 you approved the use of ASTM work item WK47329, titled "Standard Method for Determining Particulate Matter Emissions from Wood Heaters using Cordwood Test Fuel" with caveats. (See letter attached)

We would therefore like to inform you that we'll be using ASTM work item WK47329 in conjunction with ASTM 2515-11 and CSA B415.1-10 for certification of this model line.

I would like to inform you that we'll be adding two additional model names to this certification which are the Monaco XL and Kozy Heat. Just like the FP-15 and the Horizon, these models will only be aesthetically different compared to the HE350.

The accredited laboratory performing the test will be a division of **Intertek Testing NA Ltd** located at:

1829, 32nd Avenue, Lachine
Quebec, Canada, H8T 3J1

And contact information at Intertek will be the following:

Claude Pelland, Eng
claude.pelland@intertek.com

Current address of Stove Builder International Inc. can be found at the bottom of this document and contact information at SBI will be:

Vincent Pelletier, Jr. Eng.
vpelletier@sbi-international.com

Should you need additional documents, please let us know.

Sincerely,

Vincent Pelletier, Jr. Eng.
Chemical Engineer
Stove Builder International Inc.

UNITED STATES ENVIRONMENTAL PROTECTION AGENCY
RESEARCH TRIANGLE PARK, NC 27711

JAN 21 2016

OFFICE OF
AIR QUALITY PLANNING
AND STANDARDS

Mr. Vincent Pelletier, Jr. Eng.
Stove Builder International
Chemical Engineer
250 rue de Copenhague
Saint-Augustin-de-Desmaures
Quebec Canada, G3A 2H3

Dear Mr. Pelletier,

I am writing in response to your January 20, 2016 letter regarding the HE 350 wood stove and equivalent model FP-15 and Horizon. You are requesting an alternative test method using cordwood as referenced in Section 60.534 (a) (ii) of 40 CFR Part 60 Subpart AAA, Standards of Performance for New Residential Wood Heaters. You request to use the procedures and specifications found in the ASTM draft cordwood test method, ASTM work Item WK47329, titled "Standard Method for Determining Particulate Matter Emissions from Wood Heaters using Cordwood Test Fuel."

With the caveats listed below, we approve your alternative method request for testing the HE 350 wood stove and equivalent model FP-15 and Horizon wood stoves. As required in Subpart AAA Standards of Performance for New Residential Wood Heaters Section 60.534 (d), the manufacturer or approved test lab must also measure the first hour of particulate matter emissions for each test run using a separate filter in one of the two parallel sampling trains. These results must be reported separately and also included in the total particulate matter emissions per run and Section 60.534 (e) the manufacturer must have the approved test laboratory measure the efficiency, heat output and carbon monoxide emissions of the tested wood heater using Canadian Standards Administration (CSA) Method B415.1-10. For particulate matter emission concentrations ASTM 2515-11 should be used, four inch filters are also acceptable to use.

The following changes to ASTM work Item WK47329, titled "Standard Method for Determining Particulate Matter Emissions from Wood Heaters using Cordwood Test Fuel" must be followed:

1. The wood heater must be aged for 50 hours as stated in Appendix A-8 to Part 60 Test Methods 26 through 30B, procedures section 2.1.4 and not the 48 hours a stated in WK47329 section 9.1.4.

2. The end of test criteria is defined when the weight scale indicates the remaining weight of the test fuel as 0.0 lbs (0.00 kg) or less for 30 seconds. This criteria should be used for the high fire, low and medium burn rates.

3. Section 9.5.1 Start-up Condition. The average heater surface temperature per 9.2.2 and flue-gas temperature per 9.2.4 at the start of the test run must be less than a 10°F above ambient for the high fire test category.

4. Section 9.6.14 Invalid Test Run. The test run shall be considered invalid if less than the full test fuel weight has been consumed and there is no measurable weight loss (<0.1 lb (0.05 kg) or 1.0% of the test fuel weight, whichever is greater) for at least 30 minutes.

5. Coal bed conditions prior to loading test fuel. The coal bed should a level plane without valleys or ridges for all test runs in the high fire, low and medium burn rate categories.

6. The pre burn cycle burn rate category, leading into a test run, should be the same as the attempted burn rate category of the actual test. Example: If a low burn category is the desired test, the preburn should be at a low burn setting and likewise for the medium low, medium high and high burn rate categories.

The following changes to ASTM E2515-11 "Standard Test Method for Determination of Particulate Matter Emissions Collected by a Dilution Tunnel" must be followed:

1. The filter temperature must be maintained between 80 and 90 degree F during testing.

2. A glass cyclone must be used between the sampling probe and filter holders when the total particulate catch is expected to exceed 100 mg or when water droplets are present in the stack gas. This cyclone and its contents must be included in the pre-test weighing and post-test desiccation and weighing.

3. Filters must be weighed in pairs to reduce weighing error propagation. See ASTM E2515-11 Section 10.2.1 Analytical Procedure.

4. Sample filters must be Pall TX-40 or equivalent Teflon coated glass fiber, and of 47 mm, 90 mm, 100 mm or 110 mm.

5. Only one point is allowed outside the +/- 10% proportionality range per test run.

Please include this approval in your certification test report. If you have additional questions regarding these decisions, please contact Michael Toney of my staff at (919) 541-5247.

Sincerely,

Steffan Johnson, Group Leader
Measurement Technology Group

cc: Michael Toney, EPA/AQAD (143-02)
Rafael Sanchez, EPA/OECA (2227A)
Adam Baumgart-Getz, EPA/OID (C311M)
David Cole, EPA/OID (C311M)
Amanda Aldridge, EPA/OID (C311M)

SBI
Notre passion devient source d'énergie
We Turn passion Into Energy
Fabricant de poêles international inc.
Stove Builder International Inc.

May 24th, 2016

Air Branch/Wood Heater Program Lead
Monitoring, Assistance, and Media Programs Division
Office of Compliance
U.S. EPA
1200 Pennsylvania Ave., NW
MS:2227A
Washington, DC 20004
Attn: Rafael Sanchez

Subject: Start of program certification of model line name **HE350** delayed

Dear Mr. Sanchez

In a letter dated April 21st, SBI informed EPA that we wanted to start a test program on May 30th, 2016 on the model line **HE350**.

We would like to inform EPA that this program has to be delayed due to an outstanding event. My wife very recently gave birth earlier than expected and I will be not be at work for the next two weeks and will have limited access to my e-mails.

We have another test program for which we have notified EPA with a 30-days' notice that will start on June 6th and we would like the test program of the model line **HE350** to follow this certification.

The accredited laboratory and contact person will remain the same and they have already been informed of that delay.

Should you need additional documents, please let me know.

Sincerely,

Vincent Pelletier

Vincent Pelletier, Jr. Eng.
Chemical Engineer
Stove Builder International Inc.

250, rue De Copenhague, Saint-Augustin-de-Desmaures, Qc G3A 2H3 • Tél. : 418 878-3040 • Fax : 418 878-3001
www.sbi.international.com

Calibration records

General information

Project:	HE 350 Series (G102163747)
Project Engineer:	Claude Pelland
Project Engineer Signature:	
Scale ID:	SBI-206

Calibration

Date (YYYY-MM-DD)	Time (HH:MM)	Calibration weight ID	Calibration weight true mass	Reading (g)	Relative Humidity (%)	Ambiant temperature (°F)
2016-05-31	15:20	SBI-237	0.100003244	0.0999	6.4	72.1
2016-05-31	15:21	SBI-238	10.0000725	10.0000	6.4	72.1
2016-05-31	15:21	SBI-238	200.001163	199.9997	6.4	72.1
2016-06-01	14:54	SBI-237	0.100003244	0.1000	5.9	72.7
2016-06-01	14:55	SBI-238	10.0000725	10.0000	5.9	72.7
2016-06-01	14:56	SBI-238	200.001163	199.9993	5.9	72.7
2016-06-02	14:49	SBI-237	0.100003244	0.1000	6.8	72.4
2016-06-02	14:50	SBI-238	10.0000725	10.0001	6.8	72.4
2016-06-02	14:51	SBI-238	200.001163	199.9995	6.8	72.4
2016-06-03	9:32	SBI-237	0.100003244	0.1000	8.5	74.0
2016-06-03	9:33	SBI-238	10.0000725	10.0000	8.5	74.0
2016-06-03	9:34	SBI-238	200.001163	199.9996	8.5	74.0
2016-06-08	15:24	SBI-237	0.100003244	0.1000	6.4	72.3
2016-06-08	15:25	SBI-238	10.0000725	10.0000	6.4	72.3
2016-06-08	15:26	SBI-238	200.001163	200.0004	6.4	72.3
2016-06-09	08:22	SBI-237	0.100003244	0.0999	12.9	72.8
2016-06-09	08:23	SBI-238	10.0000725	10.0001	12.9	72.8
2016-06-09	08:24	SBI-238	200.001163	200.0003	12.9	72.8
2016-06-10	0:03	SBI-237	0.100003244	0.1000	1.0	71.7
2016-06-10	0:04	SBI-238	10.0000725	10.0001	1.0	71.7
2016-06-10	0:05	SBI-238	200.001163	200.0001	1.0	71.7

Filters weights

General information

Project:	HE 350 Series (G102163747)
Project Engineer:	Claude Pelland
Project Engineer Signature:	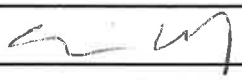
Scale ID:	SBI-206

Date (YYYY-MM-DD)	Time (HH:MM)	Filter ID	Reading (g)	Relative Humidity (%)	Ambiant temperature (°F)	Run number
2016-06-02	15:06	25	0.0842	6.8	72.4	N/A
2016-06-02	15:08	26	0.0842	6.8	72.4	N/A
2016-06-02	15:09	27	0.0834	6.8	72.4	N/A
2016-06-02	15:10	28	0.0838	6.8	72.4	N/A
2016-06-02	15:10	29	0.0840	6.8	72.4	N/A
2016-06-02	15:11	30	0.0837	6.8	72.4	N/A
2016-06-02	15:12	31	0.0839	6.8	72.4	N/A
2016-06-02	15:12	32	0.0839	6.8	72.4	N/A
2016-06-02	15:13	33	0.0842	6.8	72.4	N/A
2016-06-02	15:13	34	0.0843	6.8	72.4	N/A
2016-06-02	15:14	35	0.0848	6.8	72.4	N/A
2016-06-02	15:15	36	0.0838	6.8	72.4	N/A
2016-06-02	15:16	37	0.0845	6.8	72.4	N/A
2016-06-02	15:16	38	0.0837	6.8	72.4	N/A
2016-06-02	15:17	39	0.0831	6.8	72.4	N/A
2016-06-02	15:17	40	0.0843	6.8	72.4	N/A
2016-06-02	15:18	41	0.0830	6.8	72.4	N/A
2016-06-02	15:19	42	0.0836	6.8	72.4	N/A
2016-06-02	15:19	43	0.0842	6.8	72.4	N/A
2016-06-02	15:20	44	0.0840	6.8	72.4	N/A
2016-06-02	15:21	45	0.0844	6.8	72.4	N/A
2016-06-02	15:21	46	0.0848	6.8	72.4	N/A
2016-06-02	15:22	47	0.0848	6.8	72.4	N/A
2016-06-02	15:22	48	0.0845	6.8	72.4	N/A

Filters weights

General information

Project:	HE 350 Series (G102163747)
Project Engineer:	Claude Pelland
Project Engineer Signature:	
Scale ID:	SBI-206

Date (YYYY-MM-DD)	Time (HH:MM)	Filter ID	Reading (g)	Relative Humidity (%)	Ambiant temperature (°F)	Run number
2016-06-02	**15:06**	25	0.0842	8.5	74.0	1A
2016-06-02	15:08	26	0.0842	8.5	74.0	1A
2016-06-02	15:09	27	0.0834	8.5	74.0	1B
2016-06-02	15:10	28	0.0838	8.5	74.0	1B
2016-06-02	15:10	29	0.0840	8.5	74.0	1C
2016-06-02	15:11	30	0.0837	8.5	74.0	1C
2016-06-02	15:12	31	0.0839	8.5	74.0	2A
2016-06-02	15:12	32	0.0839	8.5	74.0	2A
2016-06-02	15:13	33	0.0842	8.5	74.0	2B
2016-06-02	15:13	34	0.0843	8.5	74.0	2B
2016-06-02	15:14	35	0.0848	8.5	74.0	2C
2016-06-02	15:15	36	0.0838	8.5	74.0	2C
2016-06-02	15:16	37	0.0845	8.5	74.0	N/A
2016-06-02	15:16	38	0.0837	8.5	74.0	N/A
2016-06-02	15:17	39	0.0831	8.5	74.0	N/A
2016-06-02	15:17	40	0.0843	8.5	74.0	N/A
2016-06-02	15:18	41	0.0830	8.5	74.0	N/A
2016-06-02	15:19	42	0.0836	8.5	74.0	N/A
2016-06-02	15:19	43	0.0842	8.5	74.0	N/A
2016-06-02	15:20	44	0.0840	8.5	74.0	N/A
2016-06-02	15:21	45	0.0844	8.5	74.0	N/A
2016-06-02	15:21	46	0.0848	8.5	74.0	N/A
2016-06-02	15:22	47	0.0848	8.5	74.0	N/A
2016-06-02	15:22	48	0.0845	8.5	74.0	N/A

Filters weights

General information

Project:	HE 350 Series (G102163747)
Project Engineer:	Claude Pelland
Project Engineer Signature:	
Scale ID:	SBI-206

Date (YYYY-MM-DD)	Time (HH:MM)		Reading (g)	Relative Humidity (%)	Ambiant temperature (°F)	Run number
2016-05-31	15:42	1	0.0852	6.4	72.1	N/A
2016-05-31	15:43	2	0.0857	6.4	72.1	N/A
2016-05-31	15:44	3	0.0856	6.4	72.1	N/A
2016-05-31	15:44	4	0.0860	6.4	72.1	N/A
2016-05-31	15:45	5	0.0853	6.4	72.1	N/A
2016-05-31	15:46	6	0.0859	6.4	72.1	N/A
2016-05-31	15:46	7	0.0851	6.4	72.1	N/A
2016-05-31	15:47	8	0.0846	6.4	72.1	N/A
2016-05-31	15:48	9	0.0858	6.4	72.1	N/A
2016-05-31	15:49	10	0.0835	6.4	72.1	N/A
2016-05-31	15:49	11	0.0850	6.4	72.1	N/A
2016-05-31	15:50	12	0.0848	6.4	72.1	N/A
2016-05-31	15:50	13	0.0851	6.4	72.1	N/A
2016-05-31	15:51	14	0.0848	6.4	72.1	N/A
2016-05-31	15:52	15	0.0850	6.4	72.1	N/A
2016-05-31	15:52	16	0.0856	6.4	72.1	N/A
2016-05-31	15:53	17	0.0862	6.4	72.1	N/A
2016-05-31	15:53	18	0.0864	6.4	72.1	N/A
2016-05-31	15:54	19	0.0855	6.4	72.1	N/A
2016-05-31	15:54	20	0.0858	6.4	72.1	N/A
2016-05-31	15:55	21	0.0857	6.4	72.1	N/A
2016-05-31	15:56	22	0.0857	6.4	72.1	N/A
2016-05-31	15:56	23	0.0840	6.4	72.1	N/A
2016-05-31	15:57	24	0.0841	6.4	72.1	N/A

Filters weights

General information

Project:	HE 350 Series (G102163747)
Project Engineer:	Claude Pelland
Project Engineer Signature:	
Scale ID:	SBI-206

Date (YYYY-MM-DD)	Time (HH:MM)		Reading (g)	Relative Humidity (%)	Ambiant temperature (°F)	Run number
2016-06-01	15:23	1	0.0851	5.9	72.7	N/A
2016-06-01	15:24	2	0.0857	5.9	72.7	N/A
2016-06-01	15:25	3	0.0856	5.9	72.7	N/A
2016-06-01	15:26	4	0.0861	5.9	72.7	N/A
2016-06-01	15:26	5	0.0853	5.9	72.7	N/A
2016-06-01	15:27	6	0.0858	5.9	72.7	N/A
2016-06-01	15:28	7	0.0850	5.9	72.7	N/A
2016-06-01	15:28	8	0.0845	5.9	72.7	N/A
2016-06-01	15:29	9	0.0858	5.9	72.7	N/A
2016-06-01	15:29	10	0.0835	5.9	72.7	N/A
2016-06-01	15:30	11	0.0850	5.9	72.7	N/A
2016-06-01	15:31	12	0.0848	5.9	72.7	N/A
2016-06-01	15:31	13	0.0851	5.9	72.7	N/A
2016-06-01	15:32	14	0.0848	5.9	72.7	N/A
2016-06-01	15:32	15	0.0849	5.9	72.7	N/A
2016-06-01	15:33	16	0.0855	5.9	72.7	N/A
2016-06-01	15:33	17	0.0862	5.9	72.7	3A
2016-06-01	15:34	18	0.0863	5.9	72.7	3A
2016-06-01	15:34	19	0.0856	5.9	72.7	3B
2016-06-01	15:35	20	0.0858	5.9	72.7	3B
2016-06-01	15:36	21	0.0857	5.9	72.7	3C
2016-06-01	15:36	22	0.0857	5.9	72.7	3C
2016-06-01	01:37	23	0.0839	5.9	72.7	N/A
2016-06-01	15:38	24	0.0843	5.9	72.7	N/A

Probe weights

General information

Project:	HE 350 Series (G102163747)
Project Engineer:	Claude Pelland
Project Engineer Signature:	
Scale ID:	SBI-206

Date (YYYY-MM-DD)	Time (HH:MM)		Reading (g)	Relative Humidity (%)	Ambiant temperature (°F)	Run number
2016-05-31	15:26	17	139.7113	6.4	72.1	N/A
2016-05-31	15:29	18	147.1246	6.4	72.1	N/A
2016-05-31	15:30	19	140.1275	6.4	72.1	N/A
2016-05-31	15:31	20	139.1366	6.4	72.1	N/A
2016-05-31	15:32	31	137.0215	6.4	72.1	N/A
2016-05-31	15:33	21	139.5482	6.4	72.1	N/A
2016-05-31	15:34	27	136.8190	6.4	72.1	N/A
2016-05-31	15:35	38	136.2319	6.4	72.1	N/A
2016-05-31	15:36	32	135.9698	6.4	72.1	N/A
2016-05-31	15:37	-	136.6445	6.4	72.1	N/A
2016-05-31	15:38	28	136.1844	6.4	72.1	N/A
2016-05-31	15:39	34	108.4486	6.4	72.1	N/A
2016-05-31	15:39	35	107.8573	6.4	72.1	N/A
2016-05-31	15:40	37	108.3886	6.4	72.1	N/A
2016-05-31	15:41	36	108.5195	6.4	72.1	N/A
2016-06-02	14:52	17	139.7113	6.8	72.4	N/A
2016-06-02	14:53	18	147.7246	6.8	72.4	N/A
2016-06-02	14:54	19	147.1273	6.8	72.4	N/A
2016-06-02	14:55	20	139.1364	6.8	72.4	N/A
2016-06-02	14:56	31	137.0211	6.8	72.4	N/A
2016-06-02	14:57	21	139.5479	6.8	72.4	N/A
2016-06-02	14:58	27	136.8187	6.8	72.4	N/A
2016-06-02	14:59	38	136.2318	6.8	72.4	N/A
2016-06-02	15:00	32	135.9696	6.8	72.4	N/A

Probe weights

General information

Project:	HE 350 Series (G102163747)
Project Engineer:	Claude Pelland
Project Engineer Signature:	
Scale ID:	SBI-206

Date (YYYY-MM-DD)	Time (HH:MM)	Probe ID	Reading (g)	Relative Humidity (%)	Ambiant temperature (°F)	Run number
2016-06-02	15:01	-	136.6436	6.8	72.4	N/A
2016-06-02	15:02	28	136.1845	6.8	72.4	N/A
2016-06-02	15:03	34	108.4461	6.8	72.4	N/A
2016-06-02	15:04	35	107.8569	6.8	72.4	N/A
2016-06-02	15:05	37	108.3883	6.8	72.4	N/A
2016-06-02	15:06	36	108.5182	6.8	72.4	N/A
2016-06-03	09:38	-	136.6443	8.5	74	N/A
2016-06-03	09:39	34	108.4466	8.5	74	N/A
2016-06-03	09:40	36	108.5186	8.5	74	N/A
2016-06-08	15:32	17	139.7133	6.4	72.3	N/A
2016-06-08	15:33	18	147.7229	6.4	72.3	N/A
2016-06-08	15:34	19	140.1283	6.4	72.3	N/A
2016-06-09	08:27	17	139.7131	12.9	72.8	3A
2016-06-09	08:28	18	147.7227	12.9	72.8	3B
2016-06-09	08:29	19	140.1281	12.9	72.8	3C

SAMPLE WEIGHT DETERMINATION

Client: SBI **Model:** HE350 Series (FP-15)
Project #: G102163747 **Sample ID #:** QC20160608
Date: 2016-06-08 **Engineer:** Claude Pelland **Run #:** 1 **Sample Train #:** 1A
Balance Equipment #: SBI-206 **Thermo/Hygrometer Equipment #:** SBI-213

Front Filter #	25	**Tare:**	0.0842	**Preliminary Wt :**	0.1715
Rear Filter #	26	**Tare:**	0.0842		
Seal Set #	N/A	**Tare:**	N/A	**Preliminary Wt :**	N/A
Date/Time in dessicator :	May 27th, 2016 / 8:00				

Date	Time	R/H %	Temp. (F)	Weight (grams)	Audit	Initials
2016-06-09	18:15	12.9	72.8	0.1714	100mg= 0.0999 10g= 10.0001	
2016-06-10	9:24	1.0	71.7	0.1714	100mg= 0.1000 10g= 10.0001	

Probe #:	32	**Tare:**	135.9696	**Preliminary Wt :**	135.9716
Date/Time in dessicator :	May 27th, 2016 / 8:00				

Date	Time	R/H %	Temp. (F)	Weight (grams)	Audit	Initials
2016-06-09	18:12	12.9	72.8	135.9707	200 g = 200.0003	
2016-06-10	9:18	1.0	71.7	135.9704	200 g = 200.0001	
2016-06-13	8:48	0.2	71.6	135.9707	200 g = 199.9998	
2016-06-14	8:47	0.9	72.3	135.9708	200 g = 199.9998	

Date: _____

Engineer Signature: _____

SAMPLE WEIGHT DETERMINATION

Client: SBI **Model:** HE350 Series (FP-15)
Project #: G102163747 **Sample ID #:** QC20160608
Date: 2016-06-08 **Engineer:** Claude Pelland **Run #:** 1 **Sample Train #:** 1B
Balance Equipment #: SBI-206 **Thermo/Hygrometer Equipment #:** SBI-213

Front Filter #	27	**Tare:**	0.0834	**Preliminary Wt :**	0.1703	
Rear Filter #	28	**Tare:**	0.0838			
Seal Set #	N/A	**Tare:**	N/A	**Preliminary Wt :**	N/A	
Date/Time in dessicator :	May 27th, 2016 / 8:00					

Date	**Time**	**R/H %**	**Temp. (F)**	**Weight (grams)**	**Audit**	**Initials**
2016-06-09	18:17	12.9	72.8	0.1702	100mg= 0.0999 10g= 10.0001	
2016-06-10	9:25	1.0	71.7	0.1701	100mg= 0.1000 10g= 10.0001	

Probe #:	-	**Tare:**	136.6443	**Preliminary Wt :**	136.6455	
Date/Time in dessicator :	May 27th, 2016 / 8:00					

Date	**Time**	**R/H %**	**Temp. (F)**	**Weight (grams)**	**Audit**	**Initials**
2016-06-09	18:13	12.9	72.8	136.6450	200 g = 200.0003	
2016-06-10	9:19	1.0	71.7	136.6445	200 g = 200.0001	
2016-06-13	8:49	0.2	71.6	136.6442	200 g = 199.9998	
2016-06-14	8:48	0.9	72.3	136.6443	200 g = 199.9998	

Date: _____

Engineer Signature: _____

SAMPLE WEIGHT DETERMINATION

Client: SBI **Model:** HE350 Series (FP-15)
Project #: G102163747 **Sample ID #:** QC20160608
Date: 2016-06-08 **Engineer:** Claude Pelland **Run #:** 1 **Sample Train #:** 1C
Balance Equipment #: SBI-206 **Thermo/Hygrometer Equipment #:** SBI-213

Front Filter #	29	**Tare:**	0.0840	**Preliminary Wt :**	0.1689	
Rear Filter #	30	**Tare:**	0.0837			
Seal Set #	N/A	**Tare:**	N/A	**Preliminary Wt :**	N/A	
Date/Time in dessicator :	May 27th, 2016 / 8:00					

Date	**Time**	**R/H %**	**Temp. (F)**	**Weight (grams)**	**Audit**	**Initials**
2016-06-09	18:18	12.9	72.8	0.1689	100mg= 0.0999 10g= 10.0001	
2016-06-10	9:26	1.0	71.7	0.1689	100mg= 0.1000 10g= 10.0001	

Probe #:	28	**Tare:**	136.1845	**Preliminary Wt :**	136.1844	
Date/Time in dessicator :	May 27th, 2016 / 8:00					

Date	**Time**	**R/H %**	**Temp. (F)**	**Weight (grams)**	**Audit**	**Initials**
2016-06-09	18:14	12.9	72.8	136.1844	200 g = 200.0003	
2016-06-10	9:20	1.0	71.7	136.1845	200 g = 200.0001	

Date: _____

Engineer Signature: _____

SAMPLE WEIGHT DETERMINATION

Client: SBI **Model:** HE350 Series (FP-15)
Project #: G102163747 **Sample ID #:** QC20160608
Date: 2016-06-09 **Engineer:** Claude Pelland **Run #:** 2 **Sample Train #:** 2A
Balance Equipment #: SBI-206 **Thermo/Hygrometer Equipment #:** SBI-213

Front Filter #	31	**Tare:**	0.0839	**Preliminary Wt :**	0.1716
Rear Filter #	32	**Tare:**	0.0839		
Seal Set #	N/A	**Tare:**	N/A	**Preliminary Wt :**	N/A
Date/Time in dessicator :	May 27th, 2016 / 8:00				

Date	Time	R/H %	Temp. (F)	Weight (grams)	Audit	Initials
2016-06-13	9:00	0.2	71.6	0.1715	100mg= 0.1000 10g= 10.0000	
2016-06-14	8:59	0.9	72.3	0.1715	100mg= 0.1000 10g= 10.0001	

Probe #:	34	**Tare:**	108.4461	**Preliminary Wt :**	108.4476
Date/Time in dessicator :	May 27th, 2016 / 8:00				

Date	Time	R/H %	Temp. (F)	Weight (grams)	Audit	Initials
2016-06-10	9:21	1.0	71.7	108.4465	200 g = 200.0001	
2016-06-13	8:51	0.2	71.6	108.4466	200 g = 199.9998	

Date: _____

Engineer Signature: _____

SAMPLE WEIGHT DETERMINATION

Client: SBI **Model:** HE350 Series (FP-15)
Project #: G102163747 **Sample ID #:** QC20160608
Date: 2016-06-09 **Engineer:** Claude Pelland **Run #:** 2 **Sample Train #:** 2B
Balance Equipment #: SBI-206 **Thermo/Hygrometer Equipment #:** SBI-213

Front Filter #	33	**Tare:**	0.0842	**Preliminary Wt :**	0.1719	
Rear Filter #	34	**Tare:**	0.0843			
Seal Set #	N/A	**Tare:**	N/A	**Preliminary Wt :**	N/A	
Date/Time in dessicator :	May 27th, 2016 / 8:00					

Date	**Time**	**R/H %**	**Temp. (F)**	**Weight (grams)**	**Audit**	**Initials**
2016-06-13	9:02	0.2	71.6	0.1718	100mg= 0.1000 10g= 10.0000	
2016-06-14	9:01	0.9	72.3	0.1717	100mg= 0.1000 10g= 10.0001	

Probe #:	35	**Tare:**	107.8569	**Preliminary Wt :**	107.8588	
Date/Time in dessicator :	May 27th, 2016 / 8:00					

Date	**Time**	**R/H %**	**Temp. (F)**	**Weight (grams)**	**Audit**	**Initials**
2016-06-10	9:22	1.0	71.7	107.8581	200 g = 200.0001	
2016-06-13	8:52	0.2	71.6	107.8581	200 g = 199.9998	

Date: _____

Engineer Signature: _____

SAMPLE WEIGHT DETERMINATION

Client: SBI **Model:** HE350 Series (FP-15)
Project #: G102163747 **Sample ID #:** QC20160608
Date: 2016-06-09 **Engineer:** Claude Pelland **Run #:** 2 **Sample Train #:** 2C
Balance Equipment #: SBI-206 **Thermo/Hygrometer Equipment #:** SBI-213

Front Filter #	35	**Tare:**	0.0848	**Preliminary Wt :**	0.1725
Rear Filter #	36	**Tare:**	0.0838		
Seal Set #	N/A	**Tare:**	N/A	**Preliminary Wt :**	N/A
Date/Time in dessicator :	May 27th, 2016 / 8:00				

Date	Time	R/H %	Temp. (F)	Weight (grams)	Audit	Initials
2016-06-13	9:04	0.2	71.6	0.1723	100mg= 0.1000 10g= 10.0000	
2016-06-14	9:02	0.9	72.3	0.1724	100mg= 0.1000 10g= 10.0001	

Probe #:	37	**Tare:**	108.3883	**Preliminary Wt :**	108.3893
Date/Time in dessicator :	May 27th, 2016 / 8:00				

Date	Time	R/H %	Temp. (F)	Weight (grams)	Audit	Initials
2016-06-10	9:23	1.0	71.7	108.3884	200 g = 200.0001	
2016-06-13	8:53	0.2	71.6	108.3885	200 g = 199.9998	

Date: _____

Engineer Signature: _____

SAMPLE WEIGHT DETERMINATION

Client: SBI **Model:** HE350 Series (FP-15)
Project #: G102163747 **Sample ID #:** QC20160608
Date: 2016-06-10 **Engineer:** Claude Pelland **Run #:** 3 **Sample Train #:** 3A
Balance Equipment #: SBI-206 **Thermo/Hygrometer Equipment #:** SBI-213

Front Filter #	17	**Tare:**	0.0862	**Preliminary Wt :**	0.1751	
Rear Filter #	18	**Tare:**	0.0863			
Seal Set #	N/A	**Tare:**	N/A	**Preliminary Wt :**	N/A	
Date/Time in dessicator :	May 27th, 2016 / 8:00					

Date	**Time**	**R/H %**	**Temp. (F)**	**Weight (grams)**	**Audit**	**Initials**
2016-06-13	9:06	0.2	71.6	0.1749	100mg= 0.1000 10g= 10.0000	
2016-06-14	9:04	0.9	72.3	0.1750	100mg= 0.1000 10g= 10.0001	

Probe #:	17	**Tare:**	139.7131	**Preliminary Wt :**	139.7131	
Date/Time in dessicator :	May 27th, 2016 / 8:00					

Date	**Time**	**R/H %**	**Temp. (F)**	**Weight (grams)**	**Audit**	**Initials**
2016-06-13	8:31	0.2	71.6	139.7134	200 g = 199.9998	
2016-06-14	8:28	0.9	72.3	139.7133	200 g = 199.9998	

Date: _____

Engineer Signature: _____

SAMPLE WEIGHT DETERMINATION

Client: SBI **Model:** HE350 Series (FP-15)
Project #: G102163747 **Sample ID #:** QC20160608
Date: 2016-06-10 **Engineer:** Claude Pelland **Run #:** 3 **Sample Train #:** 3B
Balance Equipment #: SBI-206 **Thermo/Hygrometer Equipment #:** SBI-213

Front Filter #	19	**Tare:**	0.0856	**Preliminary Wt :**	0.1739	
Rear Filter #	20	**Tare:**	0.0858			
Seal Set #	N/A	**Tare:**	N/A	**Preliminary Wt :**	N/A	
Date/Time in dessicator :	May 27th, 2016 / 8:00					

Date	**Time**	**R/H %**	**Temp. (F)**	**Weight (grams)**	**Audit**	**Initials**
2016-06-13	9:08	0.2	71.6	0.1740	100mg= 0.1000 10g= 10.0000	
2016-06-14	9:06	0.9	72.3	0.1741	100mg= 0.1000 10g= 10.0001	

Probe #:	18	**Tare:**	147.7227	**Preliminary Wt :**	147.7230	
Date/Time in dessicator :	May 27th, 2016 / 8:00					

Date	**Time**	**R/H %**	**Temp. (F)**	**Weight (grams)**	**Audit**	**Initials**
2016-06-13	8:32	0.2	71.6	147.7229	200 g = 199.9998	
2016-06-14	8:29	0.9	72.3	147.7228	200 g = 199.9998	

Date: _____

Engineer Signature: _____

SAMPLE WEIGHT DETERMINATION

Client: SBI **Model:** HE350 Series (FP-15)
Project #: G102163747 **Sample ID #:** QC20160608
Date: 2016-06-10 **Engineer:** Claude Pelland **Run #:** 3 **Sample Train #:** 3C
Balance Equipment #: SBI-206 **Thermo/Hygrometer Equipment #:** SBI-213

Front Filter #	21	**Tare:**	0.0857	**Preliminary Wt :**	0.1748	
Rear Filter #	22	**Tare:**	0.0857			
Seal Set #	N/A	**Tare:**	N/A	**Preliminary Wt :**	N/A	
Date/Time in dessicator :	May 27th, 2016 / 8:00					

Date	**Time**	**R/H %**	**Temp. (F)**	**Weight (grams)**	**Audit**	**Initials**
2016-06-13	9:10	0.2	71.6	0.1747	100mg= 0.1000 10g= 10.0001	
2016-06-14	9:08	0.9	72.3	0.1746	100mg= 0.1000 10g= 10.0001	

Probe #:	19	**Tare:**	140.1281	**Preliminary Wt :**	140.1290	
Date/Time in dessicator :	May 27th, 2016 / 8:00					

Date	**Time**	**R/H %**	**Temp. (F)**	**Weight (grams)**	**Audit**	**Initials**
2016-06-13	8:33	0.2	71.6	140.1290	200 g = 199.9998	
2016-06-14	8:30	0.9	72.3	140.1290	200 g = 199.9998	

Date: _____

Engineer Signature: _____